KUNA PLANNING AND ZONING COMMISSION
Agenda for August 27, 2013

Kuna City Hall ▪ Council Chambers ▪ 763 W. Avalon ▪ Kuna, Idaho

REGULAR MEETING
6:00 pm

1. **CALL TO ORDER AND ROLL CALL**
   Chairman Lee Young
   Vice Chairman Stephanie Wierschem
   Commissioner Dana Hennis
   Commissioner Cathy Gealy
   Commissioner Mike Bundy

2. **CONSENT AGENDA**
   a. Meeting Minutes – July 9, 2013
   b. Meeting Minutes – August 13, 2013

3. **OLD BUSINESS:**

4. **PUBLIC HEARING**

   a) **13-02-AN, 13-01-DA, 13-01-ZC and 13-01-S; Merlin Point Subdivision-**Requests for Annexation, a Zone Change, Development Agreement and Preliminary Plat for approx. 52 acres over 2 parcels, into the City of Kuna, from Steve Arnold (A Team Consultants), requesting C-1 Zoning for commercial and residential uses on site. The site is located at 1380 E. Kuna Road, Kuna, ID. (APN#'s: R0645254601 & S1324449005).

5. **DEPARTMENT REPORTS**

6. **CHAIRMAN / COMMISSIONER DISCUSSION**

7. **ADJOURNMENT**

CITY OF KUNA
REGULAR PLANNING & ZONING COMMISSION

MEETING MINUTES
Tuesday, July 9, 2013

NOTE: These minutes are an unofficial record of this Planning & Zoning meeting until reviewed, corrected (if deemed appropriate), and formally approved by the Kuna Planning & Zoning Commission at a subsequent Planning & Zoning meeting.

PZ COMMISSION MEMBER	PRESENT	CITY STAFF PRESENT:	PRESENT
Chairman Lee Young	x	Wendy Howell, Planning Director	x
Vice-Chairman Stephanie Wierschem	x	Troy Behunin, Planner II	x
Commissioner Dana Hennis	*Called In*	Travis Jeffers, Planning Technician	x
Commissioner Cathy Gealy	*Absent*		
Commissioner Mike Bundy	*Absent*		

6:00 P.M. –COMMISSION MEETING & PUBLIC HEARING

Call to Order and Roll Call

Chairman Young called the meeting to order at 6:27 p.m.

1. CONSENT AGENDA

a) Meeting Minutes – June 25, 2013
b) 13-02-S and 13-02-DR; Silver Trail Subdivision; Findings of Fact and Conclusions of Law

Commissioner Hennis motioned to approve consent agenda; Vice Chairman Wierschem seconds, all aye and motioned carried 3-0.

Let the record reflect that Commissioner Hennis attended the meeting via telephone. Commissioner's Bundy and Gealy were not present.

3. OLD BUSINESS:

None

4. PUBLIC HEARING:

a) **13-02-AN, 13-01-DA, 13-01-ZC and 13-01-S; Merlin Point Subdivision-**Requests for Annexation, a Zone Change, Development Agreement and Preliminary Plat for approx. 52 acres over 2 parcels, into the City of Kuna, from Steve Arnold (A Team Consultants), requesting C-1 Zoning for commercial and residential uses on site. The site is located at 1380 E. Kuna Road, Kuna, ID. (APN#'s: R0645254601 & S1324449005). **TABLED to a date certain.**

Director Howell explained that ACHD's staff report has not been finalized and therefore has not been heard in front of ACHD's Commission. Staff recommends that the hearing be tabled until August 13, 2013.

Vice Chairman Wierschem motions to table 13-02-AN, 13-01-DA, 13-01-ZC and 13-01-S; Merlin Point Subdivision until August 13, 2013; Commissioner Hennis seconds, all aye and motion carried 3-0.

5. DEPARTMENT REPORTS

1. Building Permit Totals for June 2013:
   - **40 Total Permits**
   - 17 New Residential
   - 1 New Commercial
   - 9 Miscellaneous
   - 2 Fence Permits
   - 11 Mechanical

2. A Special Use Permit application for Kuna Event Center will be heard on July 23, 2013.
3. Vice Chairman Stephanie Wierschem has been reappointed for another term.

6. CHAIRMAN / COMMISSIONER DISCUSSION

7. ADJOURNMENT

- *Vice Chairman Wierschem motions to adjourn at 6:30 PM; Commissioner Hennis seconds, all aye and motion carried 3-0.*

_____
Lee Young, Chairman
City of Kuna Planning Commission

ATTEST:

_____
Travis Jeffers, Planning Technician
City of Kuna Planning Department

CITY OF KUNA
REGULAR PLANNING & ZONING COMMISSION

MEETING MINUTES
Tuesday, August 13, 2013

NOTE: ***These minutes are an unofficial record of this Planning & Zoning meeting until reviewed, corrected (if deemed appropriate), and formally approved by the Kuna Planning & Zoning Commission at a subsequent Planning & Zoning meeting.***

PZ COMMISSION MEMBER	PRESENT	CITY STAFF PRESENT:	PRESENT
Chairman Lee Young	x	Wendy Howell, Planning Director	x
Vice-Chairman Stephanie Wierschem	*Absent*	Troy Behunin, Planner II	x
Commissioner Dana Hennis	x	Travis Jeffers, Planning Technician	x
Commissioner Cathy Gealy	x		
Commissioner Mike Bundy	x		

6:00 P.M. –COMMISSION MEETING & PUBLIC HEARING

Call to Order and Roll Call

Chairman Young called the meeting to order at 6:00 p.m.

1. CONSENT AGENDA

a) Meeting Minutes – July 9, 2013

Commissioner Gealy motioned to table consent agenda to next Planning and Zoning Commission meeting; Commissioner Hennis seconds, all aye and motioned carried 4-0.

3. OLD BUSINESS:

None

4. PUBLIC HEARING:

a) 13-07-SUP (Special Use Permit) Kuna Event Center – Enrique Contreras & Ana Paz. The applicant is requesting approvals for a SUP in an existing building, for use as an events center to hold public and private events (Weddings, Party's, Meetings, etc.), in a CBD Commercial Zone. The applicant is seeking a Beer & Wine permit for the event center.

Troy Behunin, Senior Planner, City of Kuna's Planning and Zoning Department located at 763 W. Avalon St. The application tonight is for a Special Use Permit (SUP) as well as Design Review (DR) for a Kuna event center and simple color change to the exterior of the building. All new signage for the event center will be staff level review. The SUP is being sought to gain approval for a beer and wine license. The event center is an outright permitted use in the Central Business District (CBD). The applicant(s) will use the event center for a variety of special public/private events such as weddings, company parties, birthdays and receptions.

All of the procedural items, required meetings and application materials have been satisfied. The Kuna Methodist Church and several surrounding property owners have submitted letters of support allowing the event center to use their parking spaces during events in order to meet the parking requirements. When this building was constructed they relied primarily on street parking. Kuna City Code has changed since then, which makes the parking requirements difficult to achieve on-site. Therefore, the applicant secured permission from surrounding businesses and property owners to meet those requirements. They have accumulated no less than 26 parking stalls within 300' of the event center front door. The furthest parking stall will be about 270 feet. This event center based on square footage requires 22 parking stalls and 1 additional handicap stall, which will be satisfied. The City of Kuna believes this will be a great addition to the downtown core.

Questions for Staff:

C/Bundy asked if there was a sign-up sheet from the neighborhood meeting and if anyone showed up. P/Behunin responded that yes there is a sign-up sheet, which is not typically included in the packets. There wasn't any opposition at the meeting, but the meeting is not intended to seek a vote. It's purely to inform neighbors of their intent.

C/Hennis asked if the event center had adequate handicap parking. Staff confirmed that yes they do.

No further questions for staff.

Dave Szplett, 970 Ashwood Ct. represented the applicants in this case. The event center land use meets the current zoning code; therefore we are only seeking a SUP for the beer and wine license and design approval for the exterior color change. The building is currently painted a faded grey color and they propose to change that to a fresh, white color with blue trim. There was no opposition from the neighboring church about parking or the beer and wine license.

Questions:

C/Bundy asked whether any neighbors had any concerns at the meeting. Dave explained that 7 people attended the meeting and a few had concerns about what type of meeting place it was going to be. However, after discussing with the applicants their concerns were answered.

C/Bundy asked if a capacity for the building has been determined. Dave said the capacity has been set by the Fire Department at 162 people on the top floor and 72 in the basement, which is based on the square footage of the building. The Fire Department also requires the applicant to install sprinklers within the building.

Chairman Young asked what the proposed hours of operation would be.

Enrique Contreras, owner of the El Gallo Giro restaurant in downtown Kuna is also the applicant for this event center. The proposed hours of operation will depend on the event type and the request by the renter. They envision the center being open no later than 2 am, but 12am would be more typical.

Dave assured the Commission that the hours of operation will have to comply with applicable Kuna City Code requirements.

C/Young asked if the applicant had read and understood the requirements set forth in the staff report and other agency comments. Enrique confirmed that they have read the staff report and are fine with the conditions within it.

C/Young asked if any exterior lighting was going to be installed. Enrique explained that they are considering adding lights in the back to accommodate guests. The front will include the existing lighting and the new approved sign(s) will have lights nearby as well.

C/Bundy asked if they perceive any conflicts with the amount of quests using the space at any one time. Dave explained that it is hard to tell at this time. All they know is that they have complied with the City's parking requirements and the Fire Department's conditions.

No further questions.

Public testimony opened at 6:20pm. No testimony was presented. Public testimony closed at 6:21pm.

Commissioner Hennis motioned to approve 13-07-SUP (Special Use Permit) and 13-03-DR (Design Review) for Kuna Event Center; Commissioner Bundy seconds, all aye and motioned carried 4-0.

b) 13-02-AN, 13-01-DA, 13-01-ZC and 13-01-S; Merlin Point Subdivision-Requests for Annexation, a Zone Change, Development Agreement and Preliminary Plat for approx. 52 acres over 2 parcels, into the City of Kuna, from Steve Arnold (A Team Consultants), requesting C-1 Zoning for commercial and residential uses on site. The site is located at 1380 E. Kuna Road, Kuna, ID. (APN#'s: R0645254601 & S1324449005). **TABLED AUGUST 27, 2013.**

Director Wendy Howell explained that the hearing is being tabled again because we are waiting on a final staff report from ACHD. They have scheduled it in front of their board on August 14th. We do not have to re-announce the hearing.

Commissioner Gealy motions to table 13-02-AN, 13-01-DA, 13-01-ZC and 13-01-S; Merlin Point Subdivision until August 27, 2013; Commissioner Hennis seconds, all aye and motion carried -0.

5. DEPARTMENT REPORTS

1. New Rezone application in the works for – Boise Project Board of Control
2. Building Permit Totals for July 2013:
   - **44 Total Permits**
   - 15 New Residential
   - 1 New Commercial
   - 5 Miscellaneous
   - 4 Fence Permits
   - 19 Mechanical

6. CHAIRMAN / COMMISSIONER DISCUSSION

None

7. ADJOURNMENT

- *Commissioner Hennis motions to adjourn at 6:26 PM; Commissioner Gealy seconds, all aye and motion carried 4-0.*

_____

Lee Young, Chairman
City of Kuna Planning Commission

ATTEST:

_____

Travis Jeffers, Planning Technician
City of Kuna Planning Department

City of Kuna

P.O. Box 13
Phone: (208) 922-5274
Fax: (208) 922-5989
www.Kunacity.id.gov

Staff Report

To: **Kuna Planning and Zoning Commission**

File Numbers: **13-01-AN** (Annexation)
13-01-DA (Development Agreement)
13-01-S (Subdivision) - Merlin Pointe Residential and Commercial Subdivision and Annexation

Location: 1380 East Kuna Road, Kuna, Idaho

Planner: Troy Behunin, Senior Planner

Hearing date: **August 27, 2013**

Applicant: **TFI, LP**
PO Box 690
Meridian, ID 83680
208.888.1624
Lbootstfi@gmail.com

Representative: **A-Team Land Consultants**
Steve Arnold
1785 Whisper Cove Avenue
Boise, ID 83709
208.321.0525
Steve@ateamboise.com

Table of Contents:

A. Course Proceedings
B. Applicants Request
C. Vicinity & Aerial maps
D. History
E. General Project Facts
F. Staff Analysis
G. Applicable Standards
H. Comprehensive Plan Analysis
I. Proposed Findings of Fact
J. Proposed Conclusions of Law
K. Proposed Decision by the Commission

A. Course of Proceedings:

1. A rezone and a development agreement is designated in Kuna City Code 1-14-3 (KCC), as a public hearing, with the City Council as the decision making body. This land use was given proper public notice and followed the requirements set forth in Idaho Code, Chapter 65, Local Planning Act.

a. **Notifications**

i.	Neighborhood Meeting	January 10, 2013 (four people attended)
ii.	Agencies	April 8, 2013
iii.	300' Property Owners	May 5, 2013
iv.	Kuna, Melba Newspaper	May 2, 2013
v.	Site Posted	May 9, 2013

2. The applicant is relying on the category "A" annexation process as noted in Idaho Statute §50-222. The category "A" annexation is available for annexations where all private landowners, subject to annexation, raise no objection to the annexation process.

B. Applicants Request:

1. **Request:**
   1. Annexation approval of two parcels with 52 total acres,
   2. Approval of a Development agreement to guide future development,
   3. Approval of a preliminary plat to include 56 residential connected-townhome lots,
   4. Approval of a preliminary plat to include 20 commercial lots,
   5. Change the current zone from RUT (Rural Urban Transition) in the County, to C-1 (Neighborhood Commercial District),
   6. Approval of internal public and private driveways for site traffic circulation,
   7. Approval of a 30-foot landscape buffer between non-compatible uses, and along road frontages,
   8. Access to State Highway 69 (SH 69) and Kuna Roads in four places. Three are public streets; including a right-in/right-out (RIRO) driveway, one access is proposed a private driveway.

C. Vicinity and Aerial Maps:

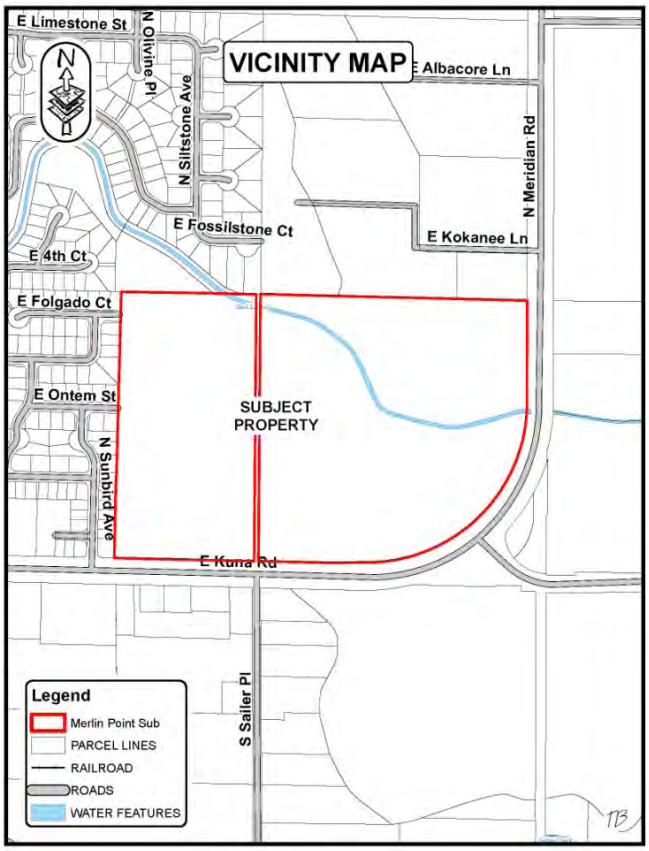

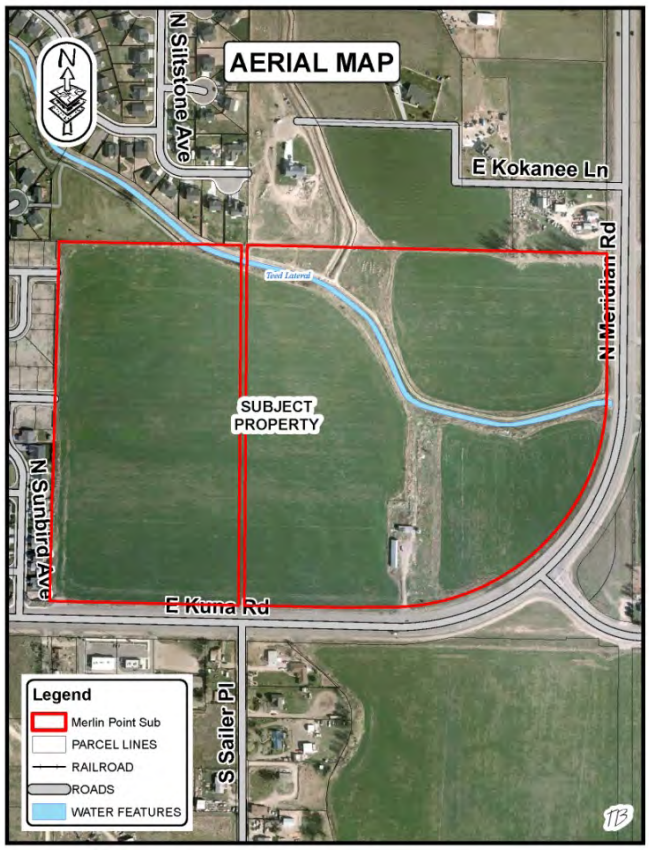

D. History: The property is contiguous to City limits on the west, south and north sides which is required in order to annex in to the City. The land currently has an existing building previously used for agriculture on the property which will be removed at time of future development.

E. General Projects Facts:

1. **Legal Description:** A legal description was included with the submitted request (See Exhibit A-2d).

2. **Comprehensive Plan Designation:** The Future Land Use Map (FLU) identifies this site as Mixed Use City Center. Staff views this land use request to be consistent with the approved FLU map.

3. **Surrounding Land Uses:**

North	RUT, R-4	Rural Urban Transition – Ada County, Medium Density Res. – Kuna City
South	RUT, C-2	Rural Urban Transition – Ada County, Area Commercial - Kuna City
East	RUT, AG	Rural Urban Transition – Ada County, Agriculture – Kuna City
West	R-6, R-12	Medium Density and High Density Residential – Kuna City

4. **Parcel Sizes, Current Zoning, Parcel Numbers:**
   18.75 Acres; Rural Urban Transition; R0615254601
   32.58 Acres; Rural Urban Transition; S1324449005

5. **Services:**
   Sanitary Sewer– City of Kuna
   Potable Water – City of Kuna
   Irrigation District – Boise-Kuna Irrigation District
   Pressurized Irrigation – City of Kuna (KMID)
   Fire Protection – Kuna Fire District
   Police Protection – Kuna City Police (Ada County Sheriff's office)
   Sanitation Services – K&M Sanitation

6. **Existing Structures, Vegetation and Natural Features:** The site has an existing accessory building which historically has been used for agricultural purposes. The building will be removed when development of the parcels begins.

7. **Transportation / Connectivity:** The site has frontage along Kuna Road on the south side of the parcels, and SH 69, on the east side of the parcel.

8. **Environmental Issues:** Staff is not aware of any environmental issues, health or safety conflicts. This site's topography is generally flat.

9. **Comprehensive Future Land Use Map:**
   The site is identified as Mixed-Use City Center on Kuna's Future Land Use Map (FLU). The site is also within the City's Highway overlay district. Staff views this zone request to be in accordance with the adopted Comprehensive Plan Map.

10. **Agency Responses:** The following agencies returned comments: City Engineer (Gordon Law, P.E.), Boise Project Board of Control, Central District Health Department, the Idaho Transportation Department (ITD), Ada County Highway District (ACHD) and the Department of Environmental Quality. The responding agency comments are included as exhibits with this case file. The following agencies reported they had no comments, Kuna School District, Kuna Police Department, Ada County Planning and Zoning, Idaho Power, J&M Sanitation, and the Post Office.

F. Staff Analysis:

This site is within the Highway Overlay District. Those standards (Kuna City Code - KCC 5-2A-1) address development within this corridor. Among those standards is access management control; this requires a frontage road be placed at least 660' from the centerline of SH 69 (KCC 5-2A-5-E). Accordingly, North Merlin Avenue shall be moved westward in order to comply, approximately 330' west. Furthermore, North Merlin Avenue exceeds the allowed length of street (150' Max.), without an approved turn-around and the applicant will need to work with staff and Kuna Fire District (KFD) for a solution.

Considering the safety for on and off-site motorists, staff views four access points along Avalon and SH 69 to be excessive for the anticipated build-out traffic associated with this proposed development, and recommends two of the proposed access points be removed. Staff recommends the western most RIRO access be removed as there are two public streets directly adjacent to the lot. Staff recommends the proposed access on the inside of the curve be eliminated due to a number of concerns associated with this entrance; Including but not limited to: 1)It's not needed to serve the site (5 other accesses), 2) it may be removed to accommodate future reconstruction of SH 69, and 3) there are sight and stopping distance concerns. Staff recommends South Sailer Avenue and East Ensolorado Street be given full access. Staff supports the three proposed stub streets to/from adjacent properties.

This site is bisected by the Teed Lateral and is designated as a future trail along its borders. Staff recommends the applicant be conditioned to provide a trail adding to the overall trail make-up of the City, in accordance with City code. Staff notes the statement on the preliminary plat "Teed Lateral - portions to be piped"… Staff also recommends that a decision be made as to how this lateral will be handled, as it directly impacts at least six commercial lots and four residential lots. Whether the Teed is piped, or re-routed, and used as an amenity, it will be a significant undertaking, and staff recommends this sizeable effort be defined sooner rather than later. This decision potentially could impact the lot layout and street configuration among other design elements.

This site is in the precarious position of being within two sewer sheds of the City. There are several issues surrounding this property and the ability to serve it. Staff recommends a sewer study shall be conducted for this site, and to consider the other TFI LP properties in the area.

The City has adopted standard typologies for local residential streets which are 51' total width. The following streets need to be updated to reflect this width; East Ontem, East Folgado, East Jackpot and North Olivine. The rights-of-way for East Ensolorado, North Sailer and North Merlin Avenue shall be changed to 61' to follow the same City and ACHD standards.

At the time of development, this application will be subject to landscaping, parking lot, signage and building design reviews, among other land use applications as applicable.

Staff has determined this application complies with Title 5 of the Kuna City Code; Idaho Statute §50-222; and the Kuna Comprehensive Plan; and forwards a recommendation of approval for Case #'s 13-01-AN, 13-01-DA and 13-01-S, subject to the recommended conditions of approval.

G. Applicable Standards:

1. City of Kuna Zoning Ordinance No. 230,
2. City of Kuna Subdivision Ordinance No. 2010-15, title 6 Subdivision Regulations,
3. City of Kuna Development Agreement Ordinance No. 525,
4. City of Kuna Comprehensive Plan,
5. City of Kuna Overlay District Ordinance, Title 5-2A,
6. Idaho Code, Title 50, Chapter 222, Annexation by Cities,

7. Idaho Code, Title 67, Chapter 6511(A), Development Agreement,
8. Idaho Code, Title 67, Chapter 65, Local Land Use Planning Act.

H. Comprehensive Plan Analysis:

The Kuna planning commission accepts the Comprehensive Plan components as described below.

1. The proposed annexation and zone change for the site is consistent with the following Comprehensive Plan components:

GOALS AND POLICIES – *Property Rights*

Goal 1: Ensure that the City of Kuna land use policies, restrictions, conditions and fees do not violate private property rights. Establish an orderly, consistent review process for the City of Kuna to evaluate whether proposed actions may result in private property "takings".

Policy 1: As part of a land use action review, the staff shall evaluate with guidance from the City's attorney; The Idaho Attorney General's six criterion established to determine the potential for property taking.

GOALS AND POLICIES – *Economic Development*

Goal 1: Promote and support a diverse and sustainable economy that will allow more Kuna residents to work in their community.

Policy 1.3: The City will develop a policy to provide incentives and/or assistance in order to competitively attract firms.

GOALS AND POLICIES – *Land Use*

Goal 2: Encourage a balance of land uses to ensure that Kuna remains a desirable, stable, and self-sufficient community.

Objective 2.2: Plan for areas designed to accommodate a diverse range of businesses and commercial activity – within both the community-scale and neighborhood-scale centers – to strengthen the local economy and to provide more opportunities for social interaction.

Policy 2.3: Retail and residential land uses should be appropriately mixed and balanced with professional offices and service facilities to provide residents with a broader mix of services within walking distance from their homes.

I. Proposed Findings of Fact:

1. The preliminary plat use is consistent with Kuna City Code.
2. The preliminary plat use appears to meet the general objectives of Kuna's Comprehensive Plan.
3. The site is physically suitable for a preliminary plat use.
4. The preliminary plat use is not likely to cause substantial environmental damage or avoidable injury to wildlife or their habitat.
5. The residential preliminary plat is not likely to cause adverse public health problems.
6. The residential preliminary plat appears to be in compliance with all ordinances and laws of the City.
7. The residential preliminary plat appears to not be detrimental to the present and potential surrounding uses; to the health, safety, and general welfare of the public taking into account the physical features of the site, public facilities and existing adjacent uses.
8. The existing and proposed street and utility services in proximity to the site are suitable and adequate for residential purposes.
9. The Kuna planning commission accepts the facts as outlined in the staff report, any public testimony and the supporting evidence list as presented.

10. Based on evidence contained in **Case No. 13-01-AN, 13-01-DA** and **13-01-S**, this proposal appears to comply with KCC Title 6.
11. Based on the evidence contained in **Case No. 13-01-AN, 13-01-DA** and **13-01-S**, this proposal appears to comply with Section 6.0 of the Comprehensive Plan and the Kuna Comprehensive Future Land Use Map.
12. The Planning and Zoning Commission has the authority to recommend approval or denial of this preliminary plat application.
13. The public notice requirements were met and the public hearing was conducted within the guidelines of applicable Idaho Code and City Ordinances.

J. Proposed Conclusions of Law:

1. Based on the evidence contained in **Case No. 13-01-AN, 13-01-DA** and **13-01-S**, Kuna planning commission finds **Case No. 13-01-AN, 13-01-DA** and **13-01-S,** comply with Kuna City Code.
2. Based on the evidence contained in **Case No. 13-01-AN, 13-01-DA** and **13-01-S**, Kuna planning commission finds **Case No. 13-01-AN, 13-01-DA** and **13-01-S,** are consistent with Kuna's Comprehensive Plan.
3. The public notice requirements have been met and the neighborhood meeting was conducted within the guidelines of applicable Idaho Code and City Ordinances.

K. Proposed Decision by the Commission:

Note: This proposed motion is for approval or denial of this request. However, if the planning commission wishes to approve or deny specific parts of the request as detailed in this report, they must be specified.

Based on the facts outlined in staff's report and the public testimony as presented at the public hearing, the Planning and Zoning Commission of Kuna, Idaho, hereby (*approves / denies)* Case No.s **13-01-AN, 13-01-DA** and **13-01-S** – an annexation, development agreement and preliminary plat request from TFI LP (Tom Nicholson), (with or without) the following conditions of approval:

Recommended Conditions of Approval:

1. The applicant and/or owner shall obtain written approval on letterhead or may be written/stamped on the approved plans of the construction plans from the agencies noted below. All submittals are required to include the lighting, landscaping, drainage, and development plans. All site improvements are prohibited prior to approval of the following agencies:
    a. The City Engineer shall approve the sewer hook-ups.
    b. The City Engineer shall approve the drainage and grading plans. Central District Health Department recommends the plan be designed and constructed in conformance with standards contained in, "Catalog for Best Management Practices for Idaho Cities and Counties". No construction, grading, filling, clearing or excavation of any kind shall be initiated until the applicant has received approval of the drainage plan.
    c. The Kuna Fire District shall approve fire flow requirements and/or building plans. Installation of fire protection facilities as required by Kuna Fire District is required.
    d. The Boise-Kuna Irrigation District shall approval any modifications to the existing irrigation system.
    e. Approval from Ada County Highway District shall be obtained and Impact Fees must be paid prior to issuance of a building permit.
2. All public rights-of-way shall be dedicated and constructed to standards of the City, Ada County Highway District and Idaho Transportation Department. No public street construction may be commenced without the approval and permit from Ada County Highway District and/or Idaho Transportation Department.
    2.1 – Dedicate right-of-way in sufficient amounts to follow City and ACHD standards and widths.
    2.2 - The following streets need rights-of-way to be dedicated at 51'; East Ontem, East Folgado, East Jackpot and North Olivine.

2.3 The following streets need rights-of-way to be dedicated at 61'; East Ensolorado, North Sailer and North Merlin Avenue.

3. Installation of service facilities shall comply with the requirements of the public utility or irrigation district providing the services. All utilities shall be installed underground, see **KCC 6-4-2-W**.
4. A sewer study shall be conducted for this site, with consideration to the other TFI, LP properties in the area.
5. Compliance with Idaho Code, Section §31-3805 pertaining to irrigation waters is required. Irrigation/drainage waters shall not be impeded by any construction on site. Compliance with the requirements of the Boise Project Board of Control is required.
6. Lighting within the site shall comply with Kuna City Code.
7. Parking within the site shall comply with Kuna City Code. (Unless specifically approved otherwise).
8. Fencing within and around the site shall comply with Kuna City Code (Unless specifically approved otherwise).
9. Signage within the site shall comply with Kuna City Code (A sign permit is required prior to sign construction).
10. All required landscaping shall be permanently maintained in a healthy growing condition. The property owner shall remove and replace unhealthy or dead plant material within 3 days or as the planting season permits as required to meet the standards of these requirements. Maintenance and planting within public rights-of-way shall be with approval from the public entities owning the property.
11. At time of development, the applicant shall comply with the designated Comprehensive Plan, use or submit for a Comprehensive Plan Map amendment.
12. Submit a petition before final platting to the City consenting to the pooling of irrigation surface water rights for delivery purposes and requesting to annex the irrigation surface water rights appurtenant to the property to the Kuna Municipal Pressure Irrigation system of the City.
13. The land owner/applicant/developer, and any future assigns having an interest in the subject property, shall fully comply with all conditions of development as approved by the City Council, or seek amending them through public hearing processes.
14. Applicant shall follow the Highway Overlay District standards within Kuna City Code (KCC 5-2A-1).
    14.1 - A frontage road shall be placed at least 660' from the centerline of SH 69. See KCC5-2A-5-E. This requires the proposed North Merlin Avenue to be moved westward.
    14.2 This requires a thirty-foot (30') commercial landscape buffer and a ten-foot (10') sidewalk adjacent the SH 69 frontage, among other requirements listed in KCC 5-2A – 1 thru 8.
15. Applicant shall follow the zoning (KCC Title 5) and subdivision (KCC Title 6) regulations as listed in City code.
16. The applicant's preliminary plat (date stamped 2.26.2013) and landscape and lighting plan, (date stamped 2.26.2013) shall be considered binding site plans, or as modified by Council.
17. All stub streets shall follow City and KFD standards for maximum street lengths without an approved turn-around (150' Max).
18. Applicant shall remove the proposed RIRO on East Kuna Road (south west part of the site), and the access on the inside of the SH 69 curve. East Ensolorado & North Sailer Avenue shall be full access, for a total of two (2) accesses from SH 69.
19. This development will be subject to landscaping and building design reviews, among other land use applications as applicable, at time of development.
20. Applicant shall indicate their intentions for either, piping and/or re-routing and using the Teed Lateral as an amenity, and show the new location of the lateral if being re-routed.
21. Applicant shall add a trail to at least one side of the Teed Lateral through the site if it is not piped / titled, in conformance with the approved trails map, and City code (KCC 5-17-14).
22. Applicant shall follow staff, City engineers and other agency recommended requirements as applicable.
23. Developer shall comply with all local, state and federal laws.

February 25, 2013

Mrs. Wendy Howell
Planning and Zoning Administrator
City of Kuna
763 W. Avalon
Kuna, Idaho 83634

Dear Wendy:

Subject: RE: Merlin Pointe Preliminary Plat, Annexation, and Rezone

On behalf of TFI Partners, A Team Land Consultants presents to the City of Kuna a preliminary plat application for the proposed Merlin Pointe Subdivision. Also included with the preliminary plat application are an annexation and rezone from RUT to C-1 zoning districts.

The subject property is located at the northwest corner of Kuna Road and State Highway 69 (Meridian Road). The property contains 52.92 total acres. The property is identified as Ada County Assessor's Tax Parcel Numbers R0615254601 and S1324449005. The proposed non-residential portion (commercial) of the property will comprise 41.42 acres. The residential portion of the property will comprise 11.5 acres of the total area.

Residential Project Summary

The residential portion of the property contains 56 townhouse residential lots and 1common lot. The applicant is proposing to rezone the residential area from the Rural-Urban Transition (RUT) District (Ada County) to the C-1 District. The City of Kuna Comprehensive Plan Future Land Use Map designates this site as Mixed Use City Center. The requested zoning of C-1 will allow for attached single family and is consistent with the Comprehensive Plan. The gross density of the residential area is calculated at 4.9 dwelling units to the acre. All of the residential lots have frontage and access along a public roadway. There is a two acre park/common area planned in the center of the residential portion of the development, playground or other equipment along with extensive landscaping will be provided. There are four pathway connections proposed to the common area to make it very accessible for pedestrian use. It is envisioned that the townhouse units will be a minimum of 1,200-square feet. Further market analysis will be provided and that minimum will be determined prior to final plat recordation. Vinyl fencing will be installed at the perimeter of the residential area, and along the interior where the residential lots back up to the common areas.

Land Use Planning & Design/ Project Management/ Real Estate
1785 Whisper Cove Avenue, Boise Idaho 83709. Ph. (208) 871-7020 Fx. (208) 321-0525
E-mail: steve@ateamboise.com

Within the common area and along the pathways into the common area 4-foot high solid fencing is proposed with 2-foot lattice. Along the northern and western boundary of the site we will install 6-foot high vinyl fencing, in accordance with City Code.

Commercial Project Summary

The Merlin Pointe Preliminary Plat includes 20 commercial lots. We are proposing to rezone the area from the RUT to the C-1, which is consistent with the "Mixed Use City Center" land use designation on the City of Kuna Future Land Use Map. The proposed commercial lots range in size from roughly .83 acres up to 6 acres. The variety in lot sizes will accommodate a variety of commercial building sizes and uses that will allow for multi-tenant retail buildings and large box retail. If we can get a large grocery use, it is anticipated there will be fewer lots final platted along both Sailor and Ensolorado. We envision the commercial area to be an upscale service oriented development that will offer much anticipated retail services to the residents of the City. Along both sides of the commercial streets will be a 20-foot landscape buffer, and along the western boundary of Lot 2, Block 1, where there are existing single family dwellings we are increasing the required 20-foot buffer to 30-feet. This is done to help mitigate any impact of operation of the commercial use on the residents. Along the western boundary and northern boundary of the subdivision we will install 6-foot vinyl fencing per City Code. Landscaping along the roadways will comply with the clear sight triangle.

Roadways within the commercial section will be constructed as 41-foot street sections with curb, gutter and sidewalk. Any section of sidewalk located outside the right-of-way will be provided within an easement. Pavement sections and design will be to City Code and ACHD requirements.

A private driveway will serve as the main access into the core commercial area with cross access easements recorded to allow all the commercial properties access to that driveway. The easement will also be utilized for sewer, water, and other utilities to adjacent lots. Specific locations of the isles will be known at the time tenants are chosen and Design Review applications are submitted. We anticipate a main anchor within the core of the commercial area with smaller uses adjacent to Meridian Road, and internal roads.

Access to Meridian Road

Primary access to the proposed development two public Roads and one private driveway aligned with Kuna Road to the east. The public streets meet both ACHD, and Idaho Transportation Department (ITD) access requirements along Meridian Road, and the private driveway will align with Kuna Road to the east allowing for the potential signalization of that access point. The applicant is proposing another access point as a right in right out only onto Meridian Road adjacent to the west boundary of the site. All access points have been approved by ITD. A traffic study is included with this application for review by ACHD, the City and ITD. The applicant will work with both ITD and ACHD to comply with all

requirements set forth by the agencies regarding storage lengths and traffic considerations.

Any permits required by the ITD will be obtained prior to final plat approval. A roadway is proposed (Merlin Avenue) along the eastern boundary of the property that will serve as a parallel street to Meridian Road and provide access to neighboring parcel when they develop. Access to the commercial area will be from Sailor Avenue, Ensolorado Avenue, and the private driveway aligned with Kuna Road. There will be an access easement recorded amongst the commercial lots bound by Sailor and Ensolorado. The easements will be noted on the final plat as those phases are recorded. No direct ingress/egress from the proposed commercial lots will be provided to Meridian Road.

The commercial area shown on the preliminary plat includes a 30 foot wide landscape/common area buffer along Meridian Road. A 10 foot wide pedestrian pathway separated a minimum of 15 feet from the Meridian Road right-of-way will be provided within the buffer area.

Annexation and Rezone

Included with the preliminary plat application is a rezone application to rezone the property from the RUT to C-1. A legal description and a map of the annexation area are included in this application. The annexation parcel is contiguous with existing City limits to the west. The proposed rezone is supported by the City of Kuna Comprehensive Plan Future Land Use Map. The purpose of the development is to provide a variety of retail establishments such as banks, restaurants, grocery, and other services to City residents, along with a high end townhouse development located in close proximity to commercial uses. A 30-foot wide buffer strip has been proposed adjacent to the existing residential units to provide separation from the commercial use. The retail services will be located in closer proximity to City residents as opposed to having to travel outside the community for the same types of services. The proposed development will also provide much needed tax revenue to help fund City infrastructure improvements.

Utilities, Irrigation and Storm Drainage

There are existing wet and dry utilities adjacent to this site's west property line. The developer is proposing to extend both sewer and water from the west into this development. Pressurized irrigation is proposed to all common lots, commercial lots, and residential units. The Teed lateral runs from Meridian Road, north and west through a portion of this development. The Boise Project Board of Control has jurisdiction over this segment of the Teed Lateral. It is planned that portions of the Teed Lateral will be piped, especially where there is a road crossing, and through portions of the commercial part of this site. As tenants are selected and exact uses are known, we will not know how much of this lateral will be piped. However depending upon costs, we may leave open the majority of the lateral, which will be further known at the time of design and final platting of this site. Easements for the lateral will be noted on the final plat

and the integrity of the lateral will be maintained. Downstream users will not be affected by any proposed design as required by Idaho Code. In preliminary discussions with the Boise Project Board of Control, a predetermined amount of Storm Drain can be discharged into the lateral. As this project moves through final platting and specific tenants are selected, we will provide final design plans and submit them to ACHD, the City, and the Board of Control for review and approval. Another method to treat Storm drain is proposed within the common lot in the residential portion, and will be designed so as to not have standing water, and compliment the open space. In the commercial portion, seepage beds are proposed and will be designed to both ACHD and City standards. Pressurized irrigation will be provided to all common areas, and designed to City standards. The water rights required for those irrigation facilities will be turned over to the City when they are completed and signed off on.

Amenities and Open Space

The proposed development includes 6.5 acres of open space to be used for a park, common area, and pedestrian pathways. A 2.22 acre park is located central to the residential portion of the development. This park will include amenities such as playground equipment for children, picnic area, volleyball and/or basketball courts, barbeque area and open space for free play and other leisure activities. Four common areas within the core residential area will provide pedestrian access to the pocket park. Interconnecting pathways from the adjacent roads will lead into the park, and landscaping adjacent to the pathways will be provided and designed to City Code. A 10 foot wide pathway will be provided along Meridian Road and continue along the south side of W. Kuna Road. The pathway will be located within a landscaped buffer and planted with trees and shrubs to give the pathway area a more open feel. The landscaped buffer will also provide a safety buffer from Meridian and Kuna Roads. The pedestrian pathway will tie into pedestrian sidewalks internal to the development to allow for a continuous network of pathways for enjoyment by the residents.

Vision Statement

This site is a main entrance into the City of Kuna and the developer wishes to create a sense of place as you enter the City. The developer owns all four corners of Kuna Road, and Meridian Road. There is a portion of right-of-way owned by ITD at the southwest corner of Kuna Road and Meridian Road that would be an excellent location for a marquis with a sign “Welcome to Kuna”. Our vision is to work with the City, the Chamber, and ITD, in helping create an entrance feature and a sense of “place” as you enter into the City. We encourage members of Staff, City Council and the Kuna Chamber of Commerce to participate in this Vision. This will only enhance the community and the project, which will be a benefit to all. In preliminary discussions with staff, there may be the possibility to help “jump start” an Urban Renewal District to assist in some improvements. This is something the developer is interested in, and would like to pursue further with the City.

It is anticipated that the applications are in compliance with all applicable plans and codes adopted by the City. Please notify us as early as possible if you should need additional clarification or information regarding this application. The proposed development will be a great addition to the City and will be a high quality mixed use development along a major gateway to the City. We want to provide a project that will make a statement as you enter the City. I look forward to working with the City as this development moves forward in the process.

Sincerely,
A Team Land Consultants

Steve Arnold
Project Manager

Cc: Linda Boots, Scott and Tom Nicholson

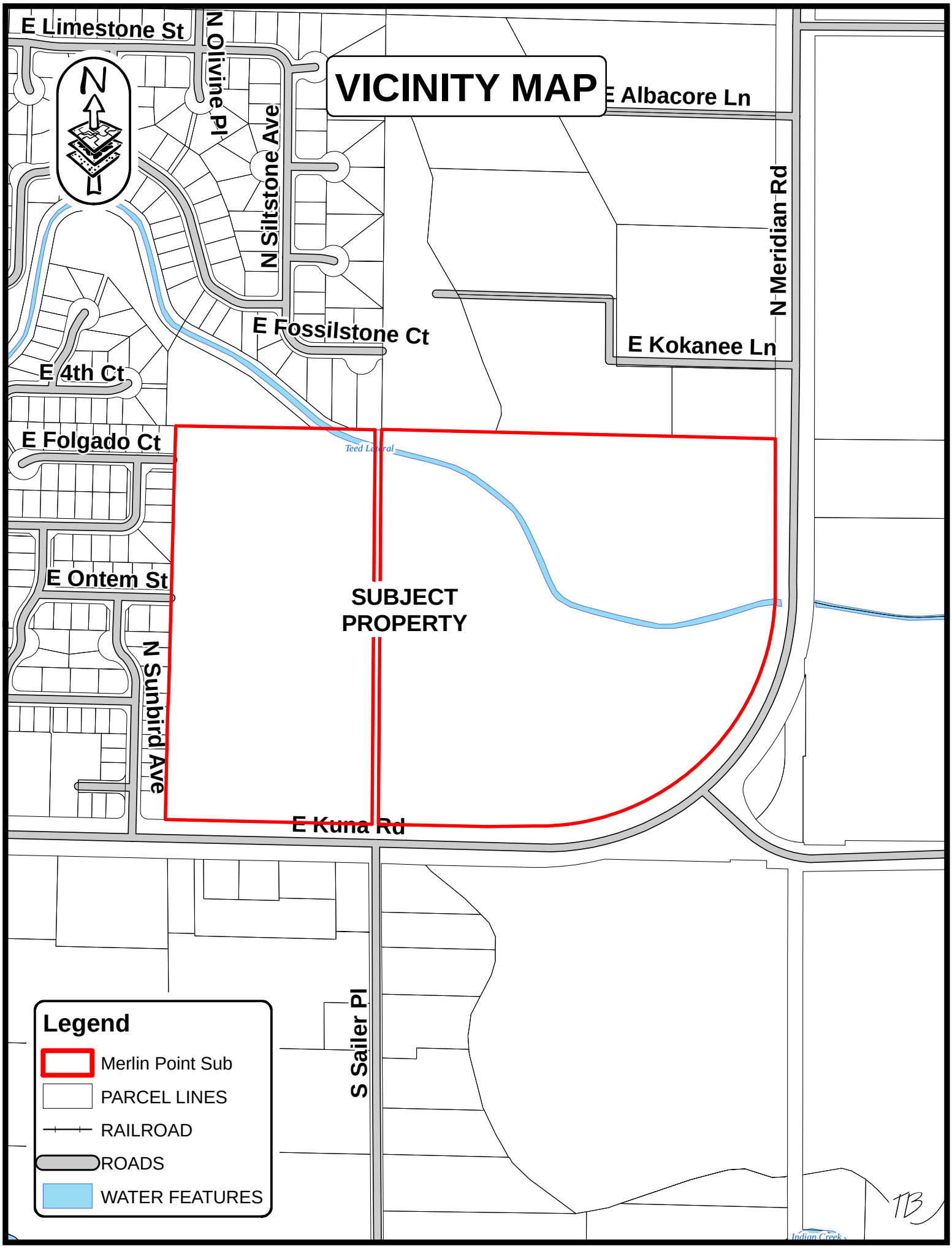
VICINITY MAP
N
E Limestone St
N Olivine Pl
N Siltstone Ave
E Albacore Ln
N Meridian Rd
E Fossilstone Ct
E Kokanee Ln
E 4th Ct
E Folgado Ct
Teed Lateral
E Ontem St
SUBJECT PROPERTY
N Sunbird Ave
E Kuna Rd
S Sailer Pl
Indian Creek
Legend
Merlin Point Sub
PARCEL LINES
RAILROAD
ROADS
WATER FEATURES
TB

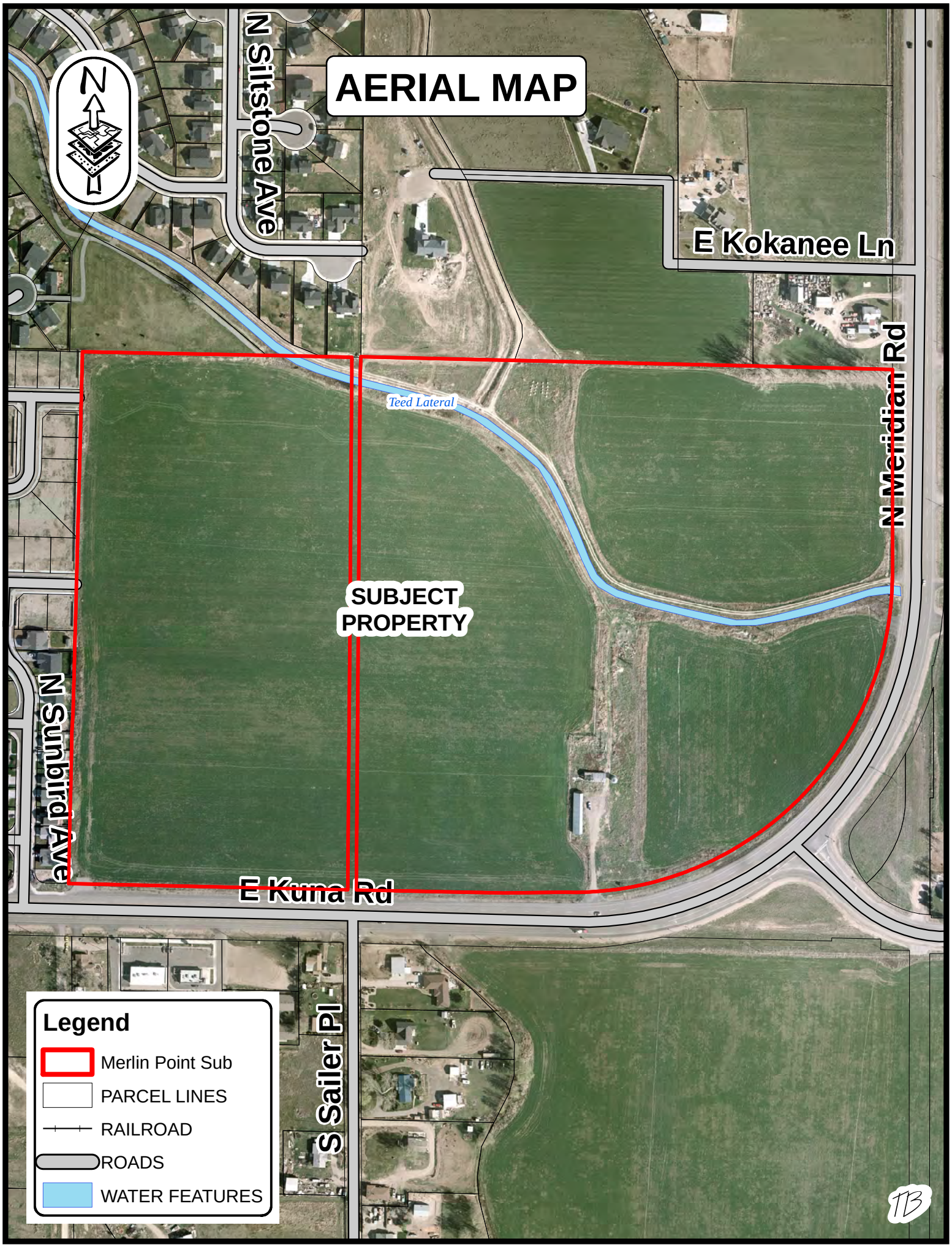
AERIAL MAP
N
N Siltstone Ave
E Kokanee Ln
N Meridian Rd
Teed Lateral
SUBJECT PROPERTY
N Sunbird Ave
E Kuna Rd
S Sailer Pl
Legend
Merlin Point Sub
PARCEL LINES
RAILROAD
ROADS
WATER FEATURES
TB

RECEIVED
FEB 28 2013
CITY OF KUNA

City of Kuna
Planning & Zoning
Department
P.O. Box 13
Kuna, Idaho 83634
208.922.5274
Fax: 208.922.5989
Website: www.cityofkuna.com

Commission & Council Review Application

Note: Engineering fees shall be paid by the applicant if required.

*Please submit the appropriate checklist (s) with application

Only For Office Use Only	
File Number (s)	13-01-AN, DA 13-01-ZC, SUB
Project name	MERLIN COMMERCIAL SUB
Date Received	2.28.2013
Date Accepted/ Complete	3.15.2013
Cross Reference Files	
Commission Hearing Date	~~5.20.2013~~ 8.27.2013
City Council Hearing Date	

Type of Review (check all that apply):

- ☑ Annexation
- ☐ Appeal
- ☐ Comprehensive Plan Amendment
- ☐ Design Review
- ☑ Development Agreement
- ☐ Final Planned Unit Development
- ☐ Final Plat
- ☐ Lot Line Adjustment
- ☐ Lot Split
- ☐ Planned Unit Development
- ☑ Preliminary Plat
- ☑ Rezone
- ☐ Special Use
- ☐ Temporary Business
- ☐ Vacation
- ☐ Variance

Contact/Applicant Information

Owners of Record: TFI LP
Address: Po Box 690
City, State, Zip: Meridian, Idaho 83680
Phone Number: 208-514-4909
E-Mail: lbootstfi@gmail.com
Fax #: 208-888-1624

Applicant (Developer): Same as above
Address:
City, State, Zip:
Phone Number:
E-Mail:
Fax #:

Engineer/Representative: Steve Arnold
Address: 1785 S Whisper Cove Ave
City, State, Zip: Boise, Id 83709
Phone Number: 208-871-7020
E-Mail: steve@ateamboise.com
Fax #: 208-321-0525

Subject Property Information

Site Address: 1380 E Kuna Rd Kuna Id 83634
Site Location (Cross Streets): E. Avalon, West of Meridian rd. & E. Kuna Rd/Meridian Rd
Parcel Number (s): R0615254601 and S1324449005
Section, Township, Range: SE1/4 of section 24 of township 2North, Range 1West
Property size : 52.92-arcres
Current land use: Agricultural
Proposed land use: Commerical
Current zoning district: RUT
Proposed zoning district: C1

Exhibit A2a

Project Description

Project / subdivision name: Merlin Point Subdivision

General description of proposed project / request: annexation of 52.92-acres from RUT to Commercial single family.

Type of use proposed (check all that apply):

- [x] Residential
- [x] Commercial
- [x] Office
- [ ] Industrial
- [ ] Other

Amenities provided with this development (if applicable): Landscape buffers and a pocket park

Residential Project Summary (if applicable)

Are there existing buildings? Yes [ ] No [x]

Please describe the existing buildings:

Any existing buildings to remain? Yes [ ] No [x]

Number of residential units: 56 Number of building lots: 56

Number of common and/or other lots: 1

Type of dwellings proposed:

- [ ] Single-Family
- [x] Townhouses
- [ ] Duplexes
- [ ] Multi-Family
- [ ] Other

Minimum Square footage of structure (s):

Gross density (DU/acre-total property): 4.9 Net density (DU/acre-excluding roads):

Percentage of open space provided: 19-percent Acreage of open space: 2.2

Type of open space provided (i.e. landscaping, public, common, etc.): Pocket Park and pathway lot

Non-Residential Project Summary (if applicable)

Number of building lots: 20 Other lots: 8

Gross floor area square footage: Existing (if applicable):

Hours of operation (days & hours): Building height:

Total number of employees: Max. number of employees at one time:

Number and ages of students/children: Seating capacity:

Fencing type, size & location (proposed or existing to remain):

Proposed Parking:

a. Handicapped spaces: Dimensions:
b. Total Parking spaces: Dimensions:
c. Width of driveway aisle:

Proposed Lighting:

Proposed Landscaping (berms, buffers, entrances, parking areas, common areas, etc.): Buffers along commercial roads

Applicant's Signature: Date: 2/28/13 2/28/13

Neighborhood Meeting Certification

CITY OF KUNA PLANNING & ZONING * 763 W. Avalon, Kuna, Idaho, 83634 * www.cityofkuna.com * (208) 922-5274 * Fax: (208) 922-5989

GENERAL INFORMATION:

You must conduct a neighborhood meeting prior to application for variance, conditional use, zoning ordinance map amendment, expansion or extension of a nonconforming use, and/or a subdivision. Please see Section 8-7A-3 of the Kuna City Code or ask one of our planners for more information on neighborhood meetings.

The meeting must be held either on a weekend between 10 a.m. and 7 p.m., or a weekday between 6 p.m. and 8 p.m. Meetings cannot be conducted on holidays, holiday weekends, or the day before or after a holiday or holiday weekend. The meeting must be held at one of the following locations:

- The Subject Property;
- The nearest available public meeting place (Examples include fire stations, libraries and community centers);
- An office space within a 1-mile radius of the subject property.

The meeting cannot take place more than 6 months prior to acceptance of the application and the application will not be accepted before the neighborhood meeting is conducted. You are required to send written notification of your meeting, allowing a reasonable amount of time before your meeting for property owners to plan to attend. Contacting and/or meeting individually with residents will not fulfill Neighborhood Meeting requirements.

You may request a list of the people you need to invite to the neighborhood meeting from our department. This list includes property owners within 300 feet of the subject property. Once you have held your neighborhood meeting, please complete this certification form and include it with your application.

Please Note: The neighborhood meeting must be conducted in one location for attendance by all neighboring residents. Contacting and/or meeting individually with residents does not comply with the neighborhood meeting requirements.

Please include a copy of the sign-in sheet for your neighborhood meeting, so we have written record of who attended your meeting and the letter of intent sent to each recipient. In addition, provide any concerns that may have been addressed by individuals that attended the meeting.

Description of proposed project: changing land use from Agriculture to Commercial use

Date and time of neighborhood meeting: 01/10/2013 @ 5:00-7:00pm

Location of neighborhood meeting: City Hall

SITE INFORMATION:

Location: Quarter: SE 1/4 Section: 24 Township: 2N Range: 1W Total Acres: 52.34

Subdivision Name: Merlin Point Subdivision

Lot: 1,3,5,7 Block: 15

Site Address: 1380 S Kuna Rd Kuna, Id 83634

Tax Parcel Number(s): R0615254601, S1324449005

Please make sure to include **all** parcels & addresses included in your proposed use.

CURRENT PROPERTY OWNER:

Name: TFI LP

Address: Po Box 690 City: Meridian State: ID Zip: 83680

CONTACT PERSON (Mail recipient and person to call with questions):

Name: Steve Arnold Business (if applicable): A Team Land Consultant

Address: 1785 S Whisper Cove Ave City: Boise State: ID Zip: 83709

Exhibit A2h

PROPOSED USE:

Application Type	*Brief Description*
Annexation	
Re-zone	From Agricultural to Commercial
Subdivision (Sketch Plat and/or Prelim. Plat)	
Special Use	
Variance	
Expansion of Extension of a Nonconforming Use	
Zoning Ordinance Map Amendment	

APPLICANT:

Name: Steve Arnold

Address: 1785 S Whisper Cove Ave

City: Boise State: ID Zip: 83709

Telephone: 208-871-7020 Fax: 208-321-0525

I certify that a neighborhood meeting was conducted at the time and location noted on this form and in accord with Section 8-7A-3 of the Kuna City Code.

Signature: (Applicant) Date 1/10/13

SIGN IN SHEET

PROJECT NAME: Merlin Pointe Subdivision

Date: 1/10/13

	Name	Address	Zip	Phone
1	Donna Young	399 Nth Meridian Rd	83634	922-4468
2	Paul Gossman	1420 E. Kokanee	83634	Chevyfarm@Hotmail.com
3	PGOSS02@yahoo.com			
4	Mike & Bobbie Sailer	P.O. Box 82 Kuna	83634-0082	922-1181
5		Smikedbike@yahoo.com		Bobbiesailer@yahoo.com
6				
7				
8				
9				
10				
11				
12				
13				
14				
15				
16				
17				
18				
19				
20				
21				
22				
23				
24				
25				
26				
27				
28				
29				
30				

CITY OF KUNA
P.O. BOX 13
KUNA, ID 83634
www.cityofkuna.com

GORDON N. LAW
CITY ENGINEER

Telephone (208) 287-1727; Fax (208) 287-1731
Email: gordon@cityofkuna.com

MEMORANDUM

TO: Director of Kuna Planning and Zoning

FROM: Gordon N. Law
Kuna City Engineer

RE: Merlin Pointe Subdivision
Annexation; Rezone; Preliminary Plat; Development Agreement
13-01-AN, 13-01-ZC; 13-01-S, 13-01-DA

DATE: August 23, 2013

The City Engineer has reviewed the Annexation, Zone Change, Preliminary Plat and Development Agreement request of the above applicant dated April 8, 2013. It is noted that the request and application do provide a detailed narrative description or plan for development of the site and comments will be structured accordingly. The request also proposes to stagger the development in 5 phases.

1. **Sanitary Sewer System**

   a) The City has sufficient sewer treatment capacity to serve this site. The wastewater from this area presently is treated in the south treatment facility. This site is not connected to the city system and would be subject to connection fees for the demand of the ultimate connected load as provided in the City's Standard Table.
   b) This property was not included in Local Improvement District 2006-1 and has not otherwise pre-paid fees for connections and consequently does not have reserved treatment capacity. Treatment capacity may be secured for this site only from those who have reserved capacity or from capacity not reserved and upon payment of appropriate fees.
   c) The nearest gravity mains (8-inch) are located in Folgado, Ontem and Avalon Streets adjacent to the site, but the capacities of the mains and the Orchard Lift Station into which they discharge is not certain. There is an 8-inch gravity main 300 feet north of the site in Fossilstone Court, which discharges to Hubbard Lift Station, but whose capacity is also not certain. Finally, there is a 12-inch line to be constructed shortly approximately 2900 feet north of the site without capacity concerns and which is available to this property but which would require construction of a lift station and a

transmission line. The application seems to assume this project would be served through the Orchard Lift Station.

d) The property lies within the sewer sheds of both the North and South Treatment Plants, somewhat complicating a decision on the best solution for servicing this property. In addition, the applicant owns significant additional property adjacent to this site, which when developed its sewer demand would far exceed the capacity of the Orchard lift station, and which it may be advisable to consider now in any sewer service decision. Specific recommendations of note are as follows:
   1) City Code (6-4-2O) requires connection to the City sewer system for all sanitary sewer needs.
   2) For any connected load, it is recommended this application be conditioned to conform to the sewer master plan, but subject to further evaluation. The Master Plan proposes the majority of this site is served through a refurbished (upgraded or replaced at developer expense) Orchard Lift Station, but for cost, the needs of surrounding property and other reasons, it may be advisable to consider additional options.
   3) **It is recommended a sewer service study is conducted**, with input from the developer and in consideration of this development's and the City's needs, to determine the preferred sewer service option for this property.

e) For assistance in locating existing facilities and understanding issues associated with the Master Plan and connection, please contact the City Engineer.

2. Potable Water System

a) The City has sufficient potable water supply to serve this site. This site is not connected to the city system and would be subject to connection fees for the demand of the ultimate connected load as provided in the City's Standard Table.

b) Water supply capacity is available for this site upon payment of appropriate fees. Specific recommendations of note are as follows:
   1) City Code (6-4-2X) requires connection to the City water system for all potable water needs.
   2) For any connected load, it is recommended this application be conditioned to conform to the water master plan.
   3) **12-inch water mains are to installed** by developer on both the Highway 69 and Avalon frontages. This item was omitted from the application documents.
   4) At least 8-inch water mains are to be stubbed by developer to the property line on Folgado, Ontem, Ensolardo, Merlin and Sailer entrances.

c) Improvements necessary to provide adequate fire protection as required by Kuna Fire District will be required of the development.

d) For assistance in locating existing facilities and understanding issues associated with connection, please contact the City Engineer.

e) Please verify there is adequate separation between potable water service lines and all non-potable water lines (storm drains, sewer services, etc.).

3. **Pressure Irrigation**

a) The applicant's property is not connected to the City pressure irrigation system. The nearest pressure main is located 600 feet west of the south-west corner of the site in Avalon.

b) The development is subject to connection fees based on number of dwellings for the residential area and based on ultimate landscaped area for the commercial portion, as provided in City Resolutions.
c) Irrigation supply capacity is available for this site upon payment of appropriate fees. Specific recommendations of note are as follows:
    1. Relying on drinking water for irrigation purposes is contrary to City Code (6-4-2I) and the public interest and is not accounted for in the approved Water Master Plan. It is recommended this project be conditioned to require connection and annexation to the City Pressure Irrigation system at the time of development.
    2. For any connected load, it is recommended this application be conditioned to conform to the Pressure Irrigation Master Plan. Specifically, **10-inch PI mains are to be installed** on both the Highway 69 and Avalon frontages.
    3. It is further recommended that annexation into the municipal irrigation district and pooling of water rights is a requirement at the time of final platting.
    4. It is recommended that conformity with approved City PI standards is required.

4. Grading, Gravity Irrigation, Drainage

a) Runoff from public right-of-way is regulated by ACHD or ITD, depending on the agency responsible for the right-of-way. Plans are required to conform to the appropriate agency standards.
b) Exclusive of public right-of-way, any increase in quantity or rate of runoff or decrease in quality of runoff compared to historical conditions must be detained, treated and released at rates no greater than historical amounts. In the alternative, offsite disposal of storm water in excess of historical rates or conditions of disposal at locations different than provided historically, approval of the operating entity is required. The City of Kuna relies on the ACHD Stormwater Policy Manual to establish the requirements for design of the private disposal system.
c) The city is now requiring with every new development, a documentation map that illustrates the surface and sub-surface water irrigation supply as well as drainage ways that exist in the applicant's property and in the right-of-way adjacent to the proposed development to be submitted with construction plans. The map must include 2-foot contours, a layout and essential features of existing irrigation ditches, drainage ditches and pipelines within and adjacent to the proposed development. Open and piped facilities should be noted. The map should include any proposed changes to the systems.
d) **All upstream drainage rights and downstream water delivery rights are to be preserved as a condition of development**.
e) It is noted that the application refers to the possibility of portions of Teed Lateral being piped but seems to delay the decision on what to do until a later time. The Teed Lateral compromises the viability of several of the proposed lots as presently configured. The City Engineer expresses the opinion that the handling of the Teed Lateral is so fundamental to the efficient layout of the subdivision (its streets, lots and utilities) that it **should be decided now** what the developer intends to do. In any case, the applicant will need to meet the requirements of the responsible irrigation entity if the lateral is affected in any way.

5. General

At the time of, or prior to redevelopment:

a) Plan approvals and license agreements from any affected irrigation District will be required.
b) The City reserves the right of prior approval to all agreements involving the applicant (or its successors) and the irrigation or drainage district related to the property of this application and any attempt to abandon surface water rights.
c) Verify that existing and proposed elevations match sufficiently at property boundaries to not impose a slope burden on adjacent properties.
d) State the vertical datum used for elevations.
e) Provide engineering certification on all final engineering drawings.

6. Inspection Fees

An inspection fee will be required for any **public** water, sewer and irrigation construction work associated with this development. The developer will still require a qualified responsible engineer to do sufficient inspection to justly certify to DEQ the project was completed in accordance with approved plans and specifications and to provide accurate as-built drawings to the City. The developer's engineer and the City's inspector are permitted to coordinate inspections as much as possible. The current inspection fee is $1.00 per lineal foot of sewer, water and pressure irrigation pipe and payment is due and payable prior to City's scheduling of a pre-construction conference.

7. Right-of-Way

Sufficient full and half right-of-way on section and quarter lines for arterial and collector streets shall be provided and developed pursuant to City, ITD and ACHD standards. In this instance, the site fronts on two classified streets (Avalon and Highway 69). The recommendations of the City Engineer are as follows:

a) The right-of-way for public streets is recommended to match the city's adopted typology standard for "local residential" of 51' instead of 50' for Ontem, Folgardo, Jackpot and Olivine. Similarly, the right-of-way for Ensolorado, Sailer, and Merlin, which are considered "local commercial", should be 61' instead of 60'. The right-of-way width for the main approach from Kuna Road is acceptable but there are concerns on the appropriateness of this approach (see paragraph 7.i below). The City Engineer does not provide comments at this point on the designated street width for the private drive (seems to be a parking lot feature) and leaves the matter to be considered fully in Design Review.
b) The right-of-way for Avalon and Highway 69 is required to meet ITD standards. The City is informed that rights-of-way for both streets are acceptable to ITD.
c) Residential Easements – City Code (6-3-8) requires the providing of 10-foot front and back lot line easements and side-lot easements, as necessary. The documents submitted with the application do not address residential area easements and the City Engineer recommends the City Code is complied with.
d) Commercial Area Easements - City Code (6-3-8) requires the providing of 10-foot front and back lot line easements and side-lot easements as necessary. Front-lot easements should be provided per code but the City Engineer is concerned that back and side-lot easements can prove to be obstructing nuisances on commercial lots because lot lines are routinely reconfigured later to accommodate different size commercial projects. The City Engineer is willing to accept the waiving of the back-

lot easement requirement if development design addresses the providing of all utilities from the lot fronts. The documents submitted with the application do not address easements and the matter can be dealt with during design and in final plat review.

e) It is recommended approaches onto local, section line and quarter line streets comply with ACHD approach policies and generally are as far as practical from the intersection.

f) Curb and Gutter – **City Code (6-4-2C) requires the installation of curb and gutter**: vertical curb on classified streets (Avalon and Highway 69) and either rolled or vertical elsewhere. The documents submitted with the application omit discussion of the curb and gutter required on Avalon and Highway 69. The City Engineer recommends compliance with City Code.

g) Street Drainage – The application properly includes facilities for handling storm drainage from local streets. ITD has informed City Staff they will not accept maintenance responsibility for storm drainage from the Highway so **a system must be designed and provided which can be maintained by the subdivision**. The documents submitted with the application do not fully address the drainage issue on Avalon and Highway 69. The City Engineer recommends compliance with the referenced ITD policy.

h) Sidewalk **- City Code (6-4-2Q) requires the installation of sidewalk** on all local streets and the highway. The documents submitted with the application adequately address this issue on the local streets but overlook the requirement on the highway. The City Engineer recommends compliance with City Code.

i) Entrances/Approaches – The application proposes three entrances from adjacent development and four approaches from Avalon and Highway 69. The City Engineer is in agreement with the three entrances from adjacent development but is of the opinion that four approaches from the highway is excessive for the generated load, and ultimately, detrimental to the safety and capacity of the highway. ACHD recommends elimination of the western-most approach on Avalon and the approach on the inside of the curve and provides appropriate reasoning in their comments. **The City Engineer concurs and recommends adoption of the ACHD position**.

j) Full Access Approaches – If the recommendation in paragraph 7(i) is adopted, the City Engineer is in agreement with full-access approaches on Sailor and Ensolorado.

k) Traffic Signal – The ACHD comments do not mention need of a traffic signal. Further, the City understands the applicant has withdrawn its request for a signal. The City Engineer does not recommend installation of a signal until traffic warrants justify the same.

8. As-Built Drawings

As-built drawings are required at the conclusion of any public facility construction project and are the responsibility of the developer's engineer. The city may help track changes, but will not be responsible for the finished product. As-built drawings will be required as a condition of final platting.

9. Property Description

a) A metes and bounds description prepared by a licensed surveyor has been provided by the applicant.

Sara M. Baker, President
John S. Franden, Vice President
Rebecca W. Arnold, Commissioner
Mitchell A. Jaurena, Commissioner
Jim Hansen, Commissioner

Date: July 25, 2013

To: TFI, LP - Linda Boots
PO Box 690
Meridian, ID 83680

Subject: Merlin Pointe/13-01-AN/13-01-ZC/13-01-S/13-01-DA
Northwest corner of Kuna Road and SH-69/Meridian Road

On August 14, 2013 the Ada County Highway District Commission acted on your application for the above referenced project. The attached report lists site-specific requirements, conditions of approval and street improvements, which are required.

If you have any questions, please feel free to contact me at (208) 387-6171.

Sincerely,

Stacey Yarrington
Planner II
Development Services
Ada County Highway District

CC: Project file
City of Kuna (via e-mail)
A-Team, Steve Arnold (via e-mail)

Project/File: **Merlin Pointe/13-01-AN/13-01-ZC/13-01-S/13-01-DA**
This is an annexation, rezone, preliminary plat and development agreement application for a mixed use development containing 20 commercial lots, 56 townhome residential lots and 1 common lot on 52.92 acres. The site is located on the northwest corner of Kuna Road and State Highway 69, in Kuna, Idaho.

Lead Agency: City of Kuna

Site address: Northwest corner of Kuna Road and SH-69/Meridian Road

Commission Hearing: August 14, 2013
Consent Agenda

Commission Approval: August 14, 2013

Applicant: TFI, LP - Linda Boots
PO Box 690
Meridian, ID 83680

Representative: A-Team – Steve Arnold
1785 S Whisper Cove Avenue
Boise, ID 83709

Staff Contact: Stacey Yarrington
Phone: 387-6171
E-mail: syarrington@achdidaho.org

A. Findings of Fact

1. **Description of Application:** The applicant is requesting approval of an annexation, rezone, preliminary plat and development agreement application for a mixed use development containing 20 commercial lots, 56 townhomes, and 8 common area lots, which include a park and pedestrian pathways on 52.92 acres. The proposed site is consistent with the City of Kuna's Comprehensive Plan as it is designated as being in the City Center, which calls for mixed uses. The site is located on the northwest corner of Kuna Road and State Highway 69, in Kuna, Idaho.

2. **Description of Adjacent Surrounding Area:**

Direction	Land Use	Zoning
North	Single-family dwellings (Ada County)	RUT
South	Medium-Residential/Commercial (Kuna)/ Single-family Residential/Rural Urban Transition (Ada County)	R-6/C-2/R-1/RUT
East	Single-family dwellings/Agricultural (Ada County)	RUT/A
West	Medium Density Residential/High Density Residential (Kuna)	R-6/R-12

3. **Site History:** ACHD has not previously reviewed this site for a development application.

4. **Adjacent Development:** The following developments are pending or underway in the vicinity of the site:

   - Ridley's Market within in the Profile Ridge Subdivision is currently under construction. The Ridley's Market is located north of this site on the southwest corner of Deer Flat and SH-69.

5. **Transit**: Transit services are not available to serve this site.

6. **Impact Fees:** There will be an impact fee that is assessed and due prior to issuance of any building permits. The assessed impact fee will be based on the impact fee ordinance that is in effect at that time.

7. **Capital Improvements Plan (CIP)/Five Year Work Plan (FYWP):**

   - The intersection of Linder Road and 3rd Street is listed in the Five Year Work Plan to be widened to a single lane roundabout between 2016 and 2017.

   - Avalon Street is listed in the Capital Improvements Plan to be widened to 3-lanes from Linder Road to Orchard Street between 2022 and 2026.

B. Traffic Findings for Consideration

1. **Trip Generation:** This development is estimated to generate 11,109 additional vehicle trips per day (0 existing); 918 additional vehicle trips per hour in the PM peak hour (0 existing), based on the traffic impact study.

2. **Traffic Impact Study**
   Thompson Engineers, Inc. prepared a traffic impact study for the proposed Merlin Pointe Development. Below is an executive summary of the findings **as presented by Thompson Engineers**. The following executive summary is **not the opinion of ACHD staff**. ACHD has reviewed the submitted traffic impact study for consistency with ACHD policies and practices, and may have additional requirements beyond what is noted in the summary. ACHD Staff comments on the submitted traffic impact study can be found below under staff comments.

Executive Summary

Proposed Development:

The project is a multi-use development including approximately 60 townhouses, 232 multi-family dwelling units, a warehouse store, 38,000 SF of office space, and 95,000 SF of specialty retail including a bank, a quality restaurant, and a gas station.

The site is expected to access the transportation system via SH 69 (Meridian Rd.) via four deeded approaches. The main access is proposed to align with Kuna Road in the southeast corner of the site. The other three access points have not been determined at this time.

Study Area:

The area of influence is anticipated to be southwest Ada County, Idaho, including the City of Kuna. The primary impacts will be along SH 69, with secondary impacts along Linder Road. The study area will include the intersections of SH 69 and Columbia Rd., SH 69 and Hubbard Rd., SH 69 and Deer Flat Rd., SH 69 and Kuna Rd., Linder/Avalon Rd. and Swan Falls Rd., and Linder and 3rd/Main St.

Conclusions:

Below are the findings of this report:

- Based on the trip generation methods recommended in the Trip Generation Manual, the site will generate 11,109 trips per day of which 453 trips will occur during the AM peak hour and 918 trips will occur during the PM peak hour.
- The site will access the transportation system via SH 69 via four deeded approaches. One approach is a right-in-right-out located at the west end of the project. Site traffic will primarily access the site through three approaches shown. For this report, all traffic is assumed to be distributed to three approaches.
- The main entrance of the site will operate at an acceptable level of service as design if the intersection is signalized. The main entrance is designed to align with Kuna Road on the southeast side of SH 69. The intersection is anticipated to satisfy MUTCD Warrants 1 and 3.
- The site would be best served if the signal were located at the center entrance. This location in undesirable because it is located on a curve. However, it is also located at the intersection of two section line roads, aligns with an existing road that has significant traffic, and has a lower speed limit than further north. The two mile spacing meets existing spacing on SH 69. Moving the signal north would place it in a 55 mph speed zone and create an uneven signal spacing. Moving it west would create a signal spacing problem with future signals in Kuna.
- The intersection of Deer Flat Road and Linder Road will operate at acceptable levels of service under background and total traffic conditions in build out year. The critical peak hour is in the AM peak hour due to the proximity of the high school.
- The intersection of Deer Flat Road and SH 69 will operate at acceptable levels of service under background and total traffic conditions in the build out year. The critical peak hour is in the PM peak hour.
- The intersection of Columbia Road and SH 69 will operate at acceptable levels of service under background and total traffic conditions in the build out year. The critical peak hour is in the PM peak hour.
- The intersection of Hubbard Road and SH 69 will operate at acceptable levels of service under background and total traffic conditions in the build out year. The critical peak hour is in the PM peak hour.
- The intersection of Avalon Road and Swan Falls Road will operate at acceptable levels of service under background and total traffic conditions in the build out year. The critical peak hour is in the PM peak hour.
- The intersection of Linder Road and Main Street operates as three separate stop controlled intersections. All of these intersections will operate at acceptable levels of service under background and total traffic conditions in the build out year. The critical peak hour is in the PM peak hour.
- The site access points are anticipated to operate at acceptable levels of service if a signal is provided at the main entrance.
- The proposed site plan provides good internal circulation via an internal commercial roadway.

Staff Comments/Recommendations: ACHD Traffic Services and Planning Review staff has completed a review of the required traffic impact study and has found it to be in compliance with ACHD Policy and standards.

The applicant has indicated that they are no longer requesting the installation of a signal for the proposed driveway on the inside of the curve on SH-69/Meridian Road. ACHD is supportive of this; however, ACHD has significant concerns with the proposed location of a driveway on the inside of the curve on SH-69/Meridian Road, see Finding #1 below.

3. Condition of Area Roadways
Traffic Count is based on Vehicles per hour (VPH)

Roadway	Frontage	Functional Classification	PM Peak Hour Traffic Count	PM Peak Hour Level of Service	Existing Plus Project
**State Hwy-69/ Meridian Road	2,978-feet	Principal Arterial	560	Better than "D"	Better than "D"
Kuna Road	0-feet	Minor Arterial	154	Better than "D"	Better than "D"
Avalon Street	0-feet	Principal Arterial	438	Better than "D"	Better than "D"
Linder Road	0-feet	Minor Arterial	260	Better than "D"	Better than "D"
Ontem Street	50-feet	Local	N/A	N/A	N/A
Folgado Court	50-feet	Local	N/A	N/A	N/A

* Acceptable level of service for a five-lane principal arterial is "E" (1,770 VPH).

* Acceptable level of service for a two-lane minor arterial is "D" (550 VPH).
* Acceptable level of service for a three-lane minor arterial is "D" (720 VPH).

** ACHD does not set level of service thresholds for State Highways.

4. Average Daily Traffic Count (VDT)
Average daily traffic counts are based on ACHD's most current traffic counts.

- The average daily traffic count for SH-69/Meridian Road was 13,100 on ITD permanent counter on 7/13/2012.
- The average daily traffic count for Kuna Road east of SH-69/Meridian Road was 3,570 on 5/24/2012.
- The average daily traffic count for Deer Flat west of SH-69/Meridian Road was 7,871 on 1/19/2012.
- The average daily traffic count for Avalon Street was 8,480 on ITD permanent counter on 7/13/2012.
- The average daily traffic count for Linder Road south of Deer Flat Road was 5,112 on 1/19/2012.

C. Findings for Consideration

1. Driveway on inside of Curve of State Highway 69

The applicant has proposed to construct a driveway onto SH-69/Meridian located on the inside of the curve as the main entrance to the site. ACHD has significant concerns regarding the proposed location of the driveway, as it isn't needed to serve the site, it will need to be removed in the future to accommodate the future reconstruction of the SH-69/Meridian Road/Kuna Road intersection as identified on Ada County 2035 Planning Functional Classification Map by COMPASS, and there are sight and stopping distance concerns.

As part of the traffic impact study analysis ACHD requested that the study include an analysis of the site without the proposed driveway on the inside of the curve, the site as proposed is to be served by 3 additional access points; 2 full access public street connections and one right in/right-out driveway onto SH-69, as well as two local street connections, and a stub street to the north

(6 additional access points). The applicant's engineer did not assign any traffic to the right-in/right-out driveway. The study showed that the site would be adequately served by the two full access public street connections to SH-69, which will function at an acceptable level of service "D", making the driveway on the inside of the curve not necessary to serve the site.

The COMPASS 2035 Planning Functional Classification Map identified the future extension of SH-69/Meridian Road south of Kuna Road creating the need to reconfigure the SH-69/Kuna Road intersection to a standard 4 legged intersection. If allowed by ITD, the driveway on the inside of the curve would need to be eliminated at that time.

The proposed driveway presents other unique difficulties with stopping and intersection sight distance, as AASHTO recommends an intersection sight distance of 500 feet for 45 mph and 610 feet for 55 mph. Additionally, the horizontal curve is super-elevated which would also present difficulties for drivers negotiating the curve while at the same time trying to slow down in order to turn into the proposed driveway. AASHTO states that an intersection should not be situated on a sharp horizontal curve and should be placed at tangent locations.

Staff Recommendation: Staff recommends that the City of Kuna and ITD deny the applicant's proposal for the driveway onto SH-69 on the inside of the curve, as it is not needed to serve the site; the site is served by 6 other access points. If approved by the City of Kuna and ITD, the driveway would be temporary and would need to be eliminated in the future when Meridian Road is extended south of Kuna Road. The intersection cannot function in the future as 5 leg intersection with the proposed driveway as the 5th leg.

If ITD and the City of Kuna approve the driveway, then sight triangle easements should be required to maintain the intersection sight distance from the proposed access point. The easements should note that nothing shall be built within the easement area that could cause an issue including parking lots, landscaping, buildings, etc. The sight easements should be based on AASHTO guidelines and the design speed of SH-69.

2. State Highway 69

SH-69 is under the jurisdiction of the Idaho Transportation Department (ITD). The applicant, City of Kuna, and ITD should work together to determine if additional right-of-way or improvements are necessary on SH-69.

Applicant's Proposal: The applicant is proposing to construct 2 new commercial roadways, Sailer Avenue, Ensolorado Street, 1 right-in/right-out driveway located at the sites west property line, and 1 full access driveway on the inside of the curve on SH-69.

Staff Comments/Recommendations: Comply with requirements of ITD and City of Kuna for the SH-69 road frontage. Submit to the District a letter from ITD regarding said requirements prior to District approval of the final plat or issuance of a building permit (or other required permits), whichever occurs first.

Staff recommends that ITD and the City of Kuna deny the applicant's proposal for the driveway located on the inside of the curve on SH-69 as noted in Finding #1 above. Staff also recommends that ITD and the City of Kuna deny the applicant's proposal for the right-in/right-out only driveway on the site's west property line.

The applicant's engineer did not assign any traffic to the right-in/right-out driveway as part of the submitted traffic impact study or the subsequent driveway/access analysis. The proposed driveway only offsets Sunbird Avenue by 145-feet (measured centerline to centerline). Although this driveway is proposed to be right-in/right-out only the short offset has the potential to lead to accidents as there is the potential for conflicts with vehicles accelerating as they exit the site and those turning left onto SH-69 from Sunbird or those vehicles slowing down to turn right onto Sunbird. The lot proposed to be served by the right-in/right-out driveway will have frontage on two other public streets, making the driveway unnecessary to serve the site.

3. Internal Local Streets

a. Existing Conditions: Folgado Court and Ontem Street are stubbed at the site's west property line.

b. Policy:

Local Roadway Policy: District Policy 7207.2.1 states that the developer is responsible for improving all local street frontages adjacent to the site regardless of whether or not access is taken to all of the adjacent streets.

Street Section and Right-of-Way Policy: District Policy 7207.5 states that right-of-way widths for all local streets shall generally not be less than 50-feet wide and that the standard street section shall be 36-feet (back-of-curb to back-of-curb). The District will consider the utilization of a street width less than 36-feet with written fire department approval.

Standard Urban Local Street—36-foot to 33-foot Street Section and Right-of-way Policy: District Policy 7207.5.2 states that the standard street section shall be 36-feet (back-of-curb to back-of-curb) for developments with any buildable lot that is less than 1 acre in size. This street section shall include curb, gutter, and minimum 5-foot concrete sidewalks on both sides and shall typically be within 50-feet of right-of-way.

The District will also consider the utilization of a street width less than 36-feet with written fire department approval. Most often this width is a 33-foot street section (back-of-curb to back-of-curb) for developments with any buildable lot that is less than 1 acre in size.

Continuation of Streets Policy: District Policy 7207.2.4 states that an existing street, or a street in an approved preliminary plat, which ends at a boundary of a proposed development shall be extended in that development. The extension shall include provisions for continuation of storm drainage facilities. Benefits of connectivity include but are not limited to the following:

- Reduces vehicle miles traveled.
- Increases pedestrian and bicycle connectivity.
- Increases access for emergency services.
- Reduces need for additional access points to the arterial street system
- Promotes the efficient delivery of services including trash, mail and deliveries.
- Promotes appropriate intra-neighborhood traffic circulation to schools, parks, neighborhood commercial centers, transit stops, etc.
- Promotes orderly development.

Sidewalk Policy: District Policy 7207.5.7 states that five-foot wide concrete sidewalk is required on both sides of all local street, except those in rural developments with net densities of one dwelling unit per 1.0 acre or less, or in hillside conditions where there is no direct lot frontage, in which case a sidewalk shall be constructed along one side of the street. Some local jurisdictions may require wider sidewalks.

The sidewalk may be placed next to the back-of-curb. Where feasible, a parkway strip at least 8-feet wide between the back-of-curb and the street edge of the sidewalk is recommended to provide increased safety and protection of pedestrians and to allow for the planting of trees in accordance with the District's Tree Planting Policy. If no trees are to be planted in the parkway strip, the applicant may submit a request to the District, with justification, to reduce the width of the parkway strip.

Detached sidewalks are encouraged and should be parallel to the adjacent roadway. Meandering sidewalks are discouraged.

A permanent right-of-way easement shall be provided if public sidewalks are placed outside of the dedicated right-of-way. The easement shall encompass the entire area between the right-

of-way line and 2-feet behind the back edge of the sidewalk. Sidewalks shall either be located wholly within the public right-of-way or wholly within an easement.).

c. **Applicant's Proposal:** The applicant is proposing to extend Folgado Court and Ontem Street into the site as 36-foot street sections, with curb, gutter and 5-foot wide attached sidewalk within 50-feet of right-of-way.

The applicant is proposing to construct the other internal residential local streets, Olivine Avenue and Jackpot Street as 36-foot street sections, with curb, gutter and 5-foot wide attached sidewalk within 50-feet of right-of-way.

d. **Staff Comments/Recommendations:** The applicant's proposal meets District policy and should be approved, as proposed.

4. Internal Commercial Streets

a. **Existing Conditions:** There are no existing commercial roadways within this site.

b. **Policy:**

Commercial Roadway Policy: District Policy 7208.2.1 states that the developer is responsible for improving all commercial street frontages adjacent to the site regardless of whether or not access is taken to all of the adjacent streets.

Street Section and Right-of-Way Policy: District Policy 7208.5 states that right-of-way widths for new commercial streets shall typically be 50 and 70-feet wide and that the standard street section will vary depending on the need for a center turn lane, bike lanes, volumes, percentage of truck traffic, and/or on-street parking.

- A 36-foot street section (back-of-curb to back-of-curb) will typically accommodate two travel lanes and on-street parking.
- A 40-foot street section (back-of-curb to back-of-curb) will typically accommodate two travel lanes and a center turn lane.
- A 46-foot street section (back-of-curb to back-of-curb) will typically accommodate two travel lanes and a center turn lane and bike lanes.

Continuation of Streets Policy: District Policy 7208.2.4 states that an existing street, or a street in an approved preliminary plat, which ends at a boundary of a proposed development shall be extended in that development. The extension shall include provisions for continuation of storm drainage facilities. Benefits of connectivity include but are not limited to the following:

- Reduces vehicle miles traveled.
- Increases access for emergency services.
- Reduces need for additional access points to the arterial street system.
- Promotes the efficient delivery of services including trash, mail and deliveries, water and sewer.
- Promotes orderly development.

Sidewalk Policy: District Policy 7208.5.6 requires a concrete sidewalks at least 5-feet wide to be constructed on both sides of all commercial streets. A parkway strip at least 6-feet wide between the back-of-curb and street edge of the sidewalk is required to provide increased safety and protection of pedestrians. Consult the District's planter width policy if trees are to be placed within the parkway strip.

A permanent right-of-way easement shall be provided if public sidewalks are placed outside of the dedicated right-of-way. The easement shall encompass the entire area between the right-of-way line and 2-feet behind the back edge of the sidewalk. Sidewalks shall either be located wholly within the public right-of-way or wholly within an easement.

c. **Applicant's Proposal:** The applicant is proposing to construct Sailer Avenue, Ensolorado Street, and Merlin Avenue as 41-foot street sections with curb, gutter and 5-foot wide attached concrete sidewalk within 60-feet of right-of-way.

d. **Staff Comments/Recommendations:** The applicant's proposal does not meet District policy. The applicant should be required to construct Sailer Avenue, Ensolorado Street, and Merlin Avenue as 40-foot street sections within 54-feet of right-of-way.

The applicant should provide a permanent right-of-way easement for any sidewalk located outside of the dedicated right-of-way.

5. Stub Streets

a. **Existing Conditions:** There are 2 existing stub streets to the site, Folgado Court and Ontem Street.

b. **Policy:**

Stub Street Policy: District policy 7208.2.4 states that stub streets will be required to provide circulation or to provide access to adjoining properties. Stub streets will conform with the requirements described in Section 7206.2.5.4 (collector), except a temporary cul-de-sac will not be required if the stub street has a length no greater than 150-feet. A sign shall be installed at the terminus of the stub street stating that, "THIS IS A DESIGNATED COLLECTOR ROADWAY. THIS STREET WILL BE EXTENDED AND WIDENDED IN THE FUTURE."

In addition, stub streets must meet the following conditions:

- A stub street shall be designed to slope towards the nearest street intersection within the proposed development and drain surface water towards that intersection; unless an alternative storm drain system is approved by the District.
- The District may require appropriate covenants guaranteeing that the stub street will remain free of obstructions.

Temporary Dead End Streets Policy: District policy 7206.2.4 requires that the design and construction for cul-de-sac streets shall apply to temporary dead end streets. The temporary cul-de-sac shall be paved and shall be the dimensional requirements of a standard cul-de-sac. The developer shall grant a temporary turnaround easement to the District for those portions of the cul-de-sac which extend beyond the dedicated street right-of-way. In the instance where a temporary easement extends onto a buildable lot, the entire lot shall be encumbered by the easement and identified on the plat as a non-buildable lot until the street is extended.

c. **Applicant Proposal:** The applicant is proposing to extend Folgado Court and Ontem Street as 36-foot street sections into the site and construct 1 stub street, Merlin Avenue, to the north as a 41-foot street section, located 364-feet west of SH-69/Meridian Road (centerline-to-centerline).

d. **Staff Comments/Recommendations:** The applicant's proposal meets District policy. However, the applicant should be required to construct Merlin Avenue as a 40-foot street section; and because Merlin Avenue extends greater than 150-feet, a temporary cul-de-sac turnaround should be constructed at the terminus of the roadway. The temporary cul-de-sac should be paved and meet the dimensional requirements of a standard cul-de-sac. The developer shall grant a temporary turnaround easement to the District for those portions of the cul-de-sac which extend beyond the dedicated street right-of-way. In the instance where a temporary easement extends onto a buildable lot, the entire lot shall be encumbered by the easement and identified on the plat as a non-buildable lot until the street is extended.

The applicant should be required to install a sign at the terminus of the stub street stating that, "THIS IS A DESIGNATED COLLECTOR ROADWAY. THIS STREET WILL BE EXTENDED AND WIDENDED IN THE FUTURE."

6. Driveways

6.1 Sailer Avenue

a. Existing Conditions: There are no existing driveways internal to the site.

b. Policy:

Driveway Location Policy: District policy 7208.4.1 requires driveways located near intersections to be located a minimum of 75-feet (measured centerline-to-centerline) from the nearest street intersection.

Successive Driveways: District Policy 7208.4.1 states that successive driveways away from an intersection shall have no minimum spacing requirements for access points along a local street, but the District does encourage shared access points where appropriate.

Driveway Width Policy: District policy 7208.4.3 restricts commercial driveways to a maximum width of 40-feet. Most commercial driveways will be constructed as curb-cut type facilities.

Driveway Paving Policy: Graveled driveways abutting public streets create maintenance problems due to gravel being tracked onto the roadway. In accordance with District policy, 7208.4.3, the applicant should be required to pave the driveway its full width and at least 30-feet into the site beyond the edge of pavement of the roadway.

c. Applicant's Proposal: The applicant is proposing to construct a 36-foot driveway onto Sailer Avenue, located approximately 360-feet north of SH-69/Meridian Road and 210-feet south of Jackpot Street, to connect a private drive aisle onto Ensolorado Street within the site.

The applicant is proposing a 32-foot wide driveway onto Sailer Avenue approximately 565 feet south of Jackpot Street.

d. Staff Comments/Recommendations: The applicant's proposal meets District policy and should be approved, as proposed. The applicant should be required to pave all of the driveways their full width as least 30-feet into the site beyond the edge of pavement.

6.2 Ensolorado Street

a. Existing Conditions: There are no existing driveways internal to the site.

b. Policy:

Driveway Location Policy: District policy 7208.4.1 requires driveways located near intersections to be located a minimum of 75-feet (measured centerline-to-centerline) from the nearest street intersection.

Successive Driveways: District Policy 7208.4.1 states that successive driveways away from an intersection shall have no minimum spacing requirements for access points along a local street, but the District does encourage shared access points where appropriate.

Driveway Width Policy: District policy 7208.4.3 restricts commercial driveways to a maximum width of 40-feet. Most commercial driveways will be constructed as curb-cut type facilities.

Driveway Paving Policy: Graveled driveways abutting public streets create maintenance problems due to gravel being tracked onto the roadway. In accordance with District policy, 7208.4.3, the applicant should be required to pave the driveway its full width and at least 30-feet into the site beyond the edge of pavement of the roadway.

c. Applicant's Proposal: The applicant is proposing to construct a 36-foot wide driveway onto Ensolorado Street, approximately 365-feet west of SH-69/ and 969-feet east of Sailer Avenue, to connect a private driveway aisle onto Sailer Avenue within the site.

The applicant is proposing four 32-foot wide driveways on the north and south side of Ensolorado Street at approximately 250-feet east of Sailer Avenue and at approximately 700-feet east of Sailer Avenue onto Ensolorado Street. Driveways are proposed to align centerline to centerline.

d. **Staff Comments/Recommendations:** The applicant's proposal meets District policy and should be approved, as proposed. The applicant should be required to pave all of the driveways their full width as least 30-feet into the site beyond the edge of pavement.

6.3 Jackpot Street

a. **Existing Conditions:** There are no existing driveways internal to the site.

b. **Policy:**

Driveway Location Policy: District policy 7207.4.1 requires driveways located near intersections to be located a minimum of 75-feet (measured centerline-to-centerline) from the nearest street intersection.

Successive Driveways: District Policy 7207.4.1 states that successive driveways away from an intersection shall have no minimum spacing requirements for access points along a local street, but the District does encourage shared access points where appropriate.

Driveway Width Policy: District policy 7207.4.3 states that where vertical curbs are required, residential driveways shall be restricted to a maximum width of 20-feet and may be constructed as curb-cut type driveways.

Driveway Paving Policy: Graveled driveways abutting public streets create maintenance problems due to gravel being tracked onto the roadway. In accordance with District policy, 7207.4.3, the applicant should be required to pave the driveway its full width and at least 30-feet into the site beyond the edge of pavement of the roadway.

c. **Applicant's Proposal:** The applicant is proposing to construct a 60-foot wide driveway, approximately 190-feet west of Sailer Avenue onto Jackpot Street.

The applicant is proposing to construct a 40-foot wide driveway, approximately 510-feet west of Sailer Avenue onto Jackpot Street.

d. **Staff Comments/Recommendations:** The applicant's proposal does not meet District policy. The applicant should be required to construct a 36-foot wide maximum driveway located approximately 190-feet west of Sailer Avenue and a 36-foot wide maximum driveway located approximately 510-feet west of Sailer Avenue onto Jackpot Street.

The applicant should be required to pave all of the driveways their full width as least 30-feet into the site beyond the edge of pavement.

7. Tree Planters

Tree Planter Policy: Tree Planter Policy: The District's Tree Planter Policy prohibits all trees in planters less than 8-feet in width without the installation of root barriers. Class II trees may be allowed in planters with a minimum width of 8-feet, and Class I and Class III trees may be allowed in planters with a minimum width of 10-feet.

8. Landscaping

Landscaping Policy: A license agreement is required for all landscaping proposed within ACHD right-of-way or easement areas. Trees shall be located no closer than 10-feet from all public storm drain facilities. Landscaping should be designed to eliminate site obstructions in the vision triangle at intersections. District Policy 5104.3.1 requires a 40-foot vision triangle and a 3-foot height restriction on all landscaping located at an uncontrolled intersection and a 50-foot offset from stop signs. Landscape plans are required with the submittal of civil plans and must meet all District requirements prior to signature of the final plat and/or approval of the civil plans.

9. Other Access

SH-69 and Avalon Street are classified as principal arterial roadways. Other than the access specifically approved with this application, direct lot access should be prohibited to these roadways.

D. Site Specific Conditions of Approval

1. The applicant, City of Kuna, and ITD should work together to determine if additional right-of-way or improvements are necessary on SH-69.

2. Extend Folgado Street into the site as a 36-foot street section, with curb, gutter and 5-foot wide attached sidewalk within 50-feet of right-of-way.

3. Extend Ontem Street into the site as a 36-foot street section, with curb, gutter and 5-foot wide attached sidewalk within 50-feet of right-of-way.

4. Construct the internal residential local streets, Olivine Avenue and Jackpot Street as 36-foot street sections with curb, gutter, and 5-foot wide attached sidewalks, within 50-feet of right-of-way.

5. Construct Sailer Avenue to intersect SH-69/Meridian Road 784-feet east of Sunbird Avenue aligned centerline to centerline with Sailer Avenue on the south side of SH-69/Meridian Road, as a 40-foot street section with curb, gutter and 5-foot wide attached concrete sidewalk within 54-feet of right-of-way.

6. Construct Ensolorado Street to intersect SH-69/Meridian Road approximately 860-feet north of SH-69/Kuna Road intersection as a 40-foot street section with curb, gutter and 5-foot wide attached concrete sidewalk within 54-feet of right-of-way.

7. Construct Merlin Avenue as a 40-foot street section with curb, gutter and 5-foot wide attached concrete sidewalk within 54-feet of right-of-way.

8. Construct one stub street, Merlin Avenue, to the north as a 40-foot street section, located 364-feet west from SH-69/Meridian Road (centerline-to-centerline). Provide a temporary cul-de-sac turnaround at the terminus of Merlin Avenue, as it extends greater than 150-feet. Install a sign at the terminus of the stub street stating that, “THIS IS A DESIGNATED COLLECTOR ROADWAY. THIS STREET WILL BE EXTENDED AND WIDENDED IN THE FUTURE.”

9. Construct a 36-foot wide driveway onto Sailer Avenue, located approximately 360-feet north of SH-69/Meridian Road and 210-feet south of Jackpot Street onto Ensolorado Street.

10. Construct a 32-foot wide driveway approximately 565-feet south of Jackpot Street onto Sailer Avenue.

11. Construct a 36-foot wide driveway approximately 365-feet west of SH-69/Meridian Road and 969-feet east of Sailer Avenue onto Ensolorado Street.

12. Construct 4, 32-foot wide driveways on the north and south side of Ensolorado Street at approximately 250-feet east of Sailer Avenue and at approximately 700-feet east of Sailer Avenue onto Ensolorado Street.

13. Construct 2, 36-foot wide maximum driveways at approximately 190-feet west and 510-feet west of Sailer Avenue onto Jackpot Street.

14. Provide a permanent right-of-way easement for any sidewalks located outside of the dedicated right-of-way.

15. Payment of impacts fees are due prior to issuance of a building permit.

16. Comply with all Standard Conditions of Approval.

E. Standard Conditions of Approval

1. All irrigation facilities shall be located and/or relocated outside of the ACHD right-of-way.

2. Private Utilities including sewer or water systems are prohibited from being located within the ACHD right-of-way.

3. In accordance with District policy, 7203.3, the applicant may be required to update any existing non-compliant pedestrian improvements abutting the site to meet current Americans with Disabilities Act (ADA) requirements. The applicant's engineer should provide documentation of ADA compliance to District Development Review staff for review.

4. Replace any existing damaged curb, gutter and sidewalk and any that may be damaged during the construction of the proposed development. Contact Construction Services at 387-6280 (with file number) for details.

5. A license agreement and compliance with the District's Tree Planter policy is required for all landscaping proposed within ACHD right-of-way or easement areas.

6. All utility relocation costs associated with improving street frontages abutting the site shall be borne by the developer.

7. It is the responsibility of the applicant to verify all existing utilities within the right-of-way. The applicant at no cost to ACHD shall repair existing utilities damaged by the applicant. The applicant shall be required to call DIGLINE (1-811-342-1585) at least two full business days prior to breaking ground within ACHD right-of-way. The applicant shall contact ACHD Traffic Operations 387-6190 in the event any ACHD conduits (spare or filled) are compromised during any phase of construction.

8. Utility street cuts in pavement less than five years old are not allowed unless approved in writing by the District. Contact the District's Utility Coordinator at 387-6258 (with file numbers) for details.

9. All design and construction shall be in accordance with the ACHD Policy Manual, ISPWC Standards and approved supplements, Construction Services procedures and all applicable ACHD Standards unless specifically waived herein. An engineer registered in the State of Idaho shall prepare and certify all improvement plans.

10. Construction, use and property development shall be in conformance with all applicable requirements of ACHD prior to District approval for occupancy.

11. No change in the terms and conditions of this approval shall be valid unless they are in writing and signed by the applicant or the applicant's authorized representative and an authorized representative of ACHD. The burden shall be upon the applicant to obtain written confirmation of any change from ACHD.

12. If the site plan or use should change in the future, ACHD Planning Review will review the site plan and may require additional improvements to the transportation system at that time. Any change in the planned use of the property which is the subject of this application, shall require the applicant to comply with ACHD Policy and Standard Conditions of Approval in place at that time unless a waiver/variance of the requirements or other legal relief is granted by the ACHD Commission.

F. Conclusions of Law

1. The proposed site plan is approved, if all of the Site Specific and Standard Conditions of Approval are satisfied.

2. ACHD requirements are intended to assure that the proposed use/development will not place an undue burden on the existing vehicular transportation system within the vicinity impacted by the proposed development.

G. Attachments

1. Vicinity Map
2. Site Plan
3. Utility Coordinating Council
4. Development Process Checklist
5. Request for Reconsideration Guidelines

VICINITY MAP

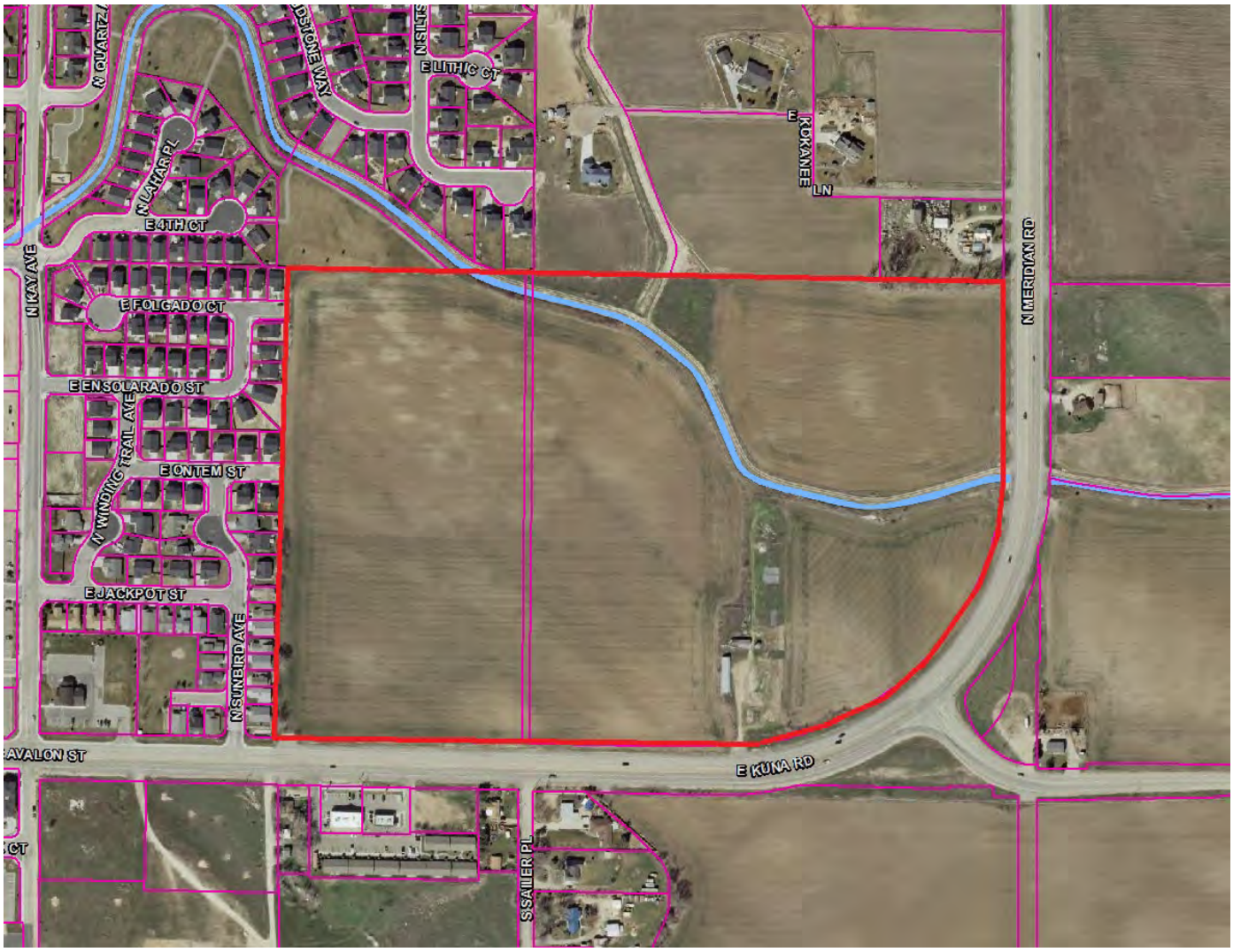

SITE PLAN

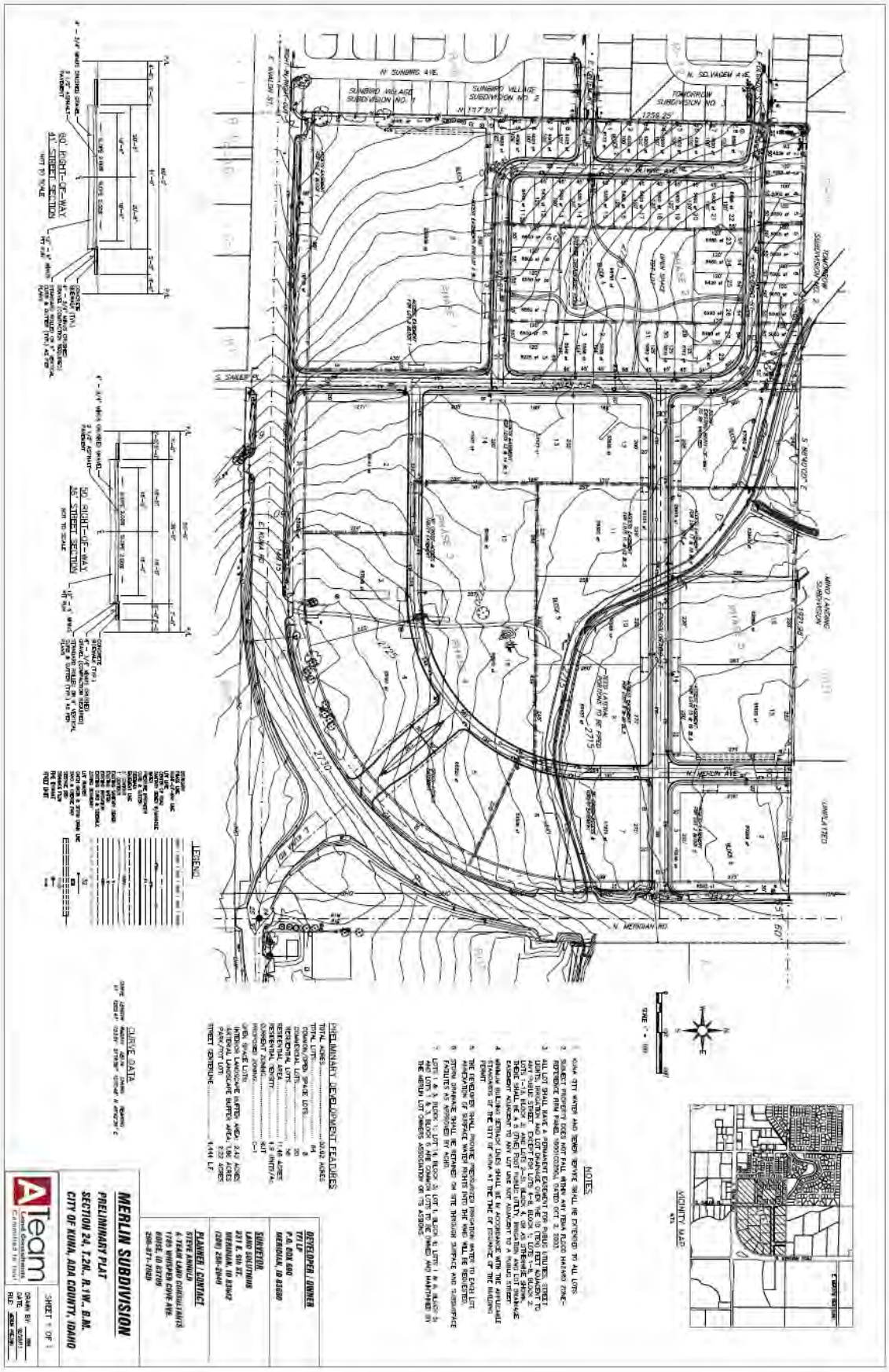
MERLIN SUBDIVISION
PRELIMINARY PLAT
SECTION 24, T.2N., R.1W., B.M.
CITY OF KUNA, ADA COUNTY, IDAHO
DEVELOPER / OWNER
TFT LLP
P.O. BOX 980
MERIDIAN, ID 83680
SURVEYOR
LAND SOLUTIONS
211 E. 6th St.
MERIDIAN, ID 83642
(208) 288-2840
PLANNER / CONTACT
STEVE ANNIUS
A TEAM LAND CONSULTANTS
1705 WHISPER COVE AVE.
BOISE, ID 83709
208-871-1683
PRELIMINARY DEVELOPMENT FEATURES
TOTAL ACRES: 80.42 ACRES
TOTAL LOTS: 258
COMMON/OPEN SPACE LOTS: 8
COMMERCIAL LOTS: 20
RESIDENTIAL LOTS: 230
GROSS RESIDENTIAL DENSITY: 1.9 UNITS/AC.
RESIDENTIAL ACREAGE: 119.4 ACRES
CURRENT ZONING: RUT
PROPOSED ZONING: C-1
OPEN SPACE LOTS: 8
WATER SHARE REQUIRED: 2.41 ACRES
LANDSCAPE BUFFER AREA: 1.06 ACRES
PARK/POT LOT: 0.23 ACRES
STREET FRONTAGE: 4,444 LF
NOTES
1. KUNA CITY WATER AND SEWER SERVICE SHALL BE EXTENDED TO ALL LOTS.
2. SUBJECT PROPERTY DOES NOT FALL WITHIN ANY FEMA FLOOD HAZARD ZONE-
3. ALL LOT SHALL HAVE A PERMANENT EASEMENT FOR PUBLIC UTILITIES, STREET LIGHTS, IRRIGATION AND LOT DRAINAGE OVER THE 3.0 (TEN) FEET ADJACENT TO ANY PUBLIC STREET, EXCEPT FOR LOTS 1-4, BLOCK 1; LOTS 1-4, BLOCK 2; LOT 1, BLOCK 3; LOTS 1-4, BLOCK 4; LOTS 1-4, BLOCK 5; AND LOTS 1-4, BLOCK 6. THERE SHALL BE A 5 (FIVE) FOOT PUBLIC UTILITY, IRRIGATION AND LOT DRAINAGE EASEMENT ADJACENT TO ANY LOT LINE NOT ADJACENT TO A PUBLIC STREET.
4. MINIMUM BUILDING SETBACK LINES SHALL BE IN ACCORDANCE WITH THE APPLICABLE ZONING ORDINANCE OF THE CITY OF KUNA AT THE TIME OF ISSUANCE OF THE BUILDING PERMIT.
5. THE DEVELOPER SHALL PROVIDE PRESSURIZED IRRIGATION WATER TO EACH LOT.
6. PUBLIC STREETS SHALL BE RETAINED ON SITE THROUGH SURFACE AND SUBSURFACE DRAINAGE.
7. LOTS 1 & 3, BLOCK 1; LOT 1, BLOCK 2; LOT 1, BLOCK 3; AND LOTS 1 & 3, BLOCK 6 ARE COMMON LOTS TO BE OWNED AND MAINTAINED BY THE MERLIN LOT OWNERS ASSOCIATION OR ITS ASSIGNS.
VICINITY MAP
LEGEND
CURVE DATA
SHEET 1 OF 1

IDAHO TRANSPORTATION DEPARTMENT
P.O. Box 8028
Boise, ID 83707-2028

(208) 334-8300
itd.idaho.gov

August 19, 2013

MS Wendy Howell
Planning Director,
City of Kuna
P.O. Box 13,
Kuna, Idaho 83634 **VIA EMAIL**

Re: **13-01-AN, 13-01-ZC, 13-01-S and 13-01-DA Merlin Subdivision – ITD Review Comments**

Dear MS Howell:

The Idaho Transportation Department (ITD) has received the April 8, 2013 transmittal for the annexation, zone change, subdivision and development agreement for the proposed Merlin Subdivision at 1380 East Kuna Road. ITD has the following review comments:

- State Highway 69 current carries less than 9,000 vehicle trips per day adjacent to the project site. This is far below the capacity of the roadway. The abutting segments of SH-69 have sufficient capacity to accommodate the site-generated traffic volumes.
- ITD has sufficient right-of-way in the SH-69 corridor to accommodate current long range corridor planning. No additional right-of-way is required from this application.
- ITD controls SH-69 and the intersection with East Kuna Road. ITD extended East Kuna Road approximately 400-ft when SH-69 was widened. The new segment of East Kuna Road has not been transferred to an ACHD maintenance responsibility.
- The project site has four deeded approaches to SH-69; including three private approaches plus the extension of Sailor Place. ITD previously agreed to the four approaches when the right-of-way was purchased for the expansion and realignment of SH-69.
- ITD has no plans within the 20-year horizon for extending SH-69 to the south. Such an extension would not typically be part of the State Highway System.
- ACHD and COMPASS have indicated the possibility for constructing Meridian Road as an extension of SH-69 south of Kuna Road. If ACHD proposes the extension of Meridian Road, ITD will require that the local highway district (ACHD) take maintenance responsibility for the segment of SH-69 south of Deer Flat Road. ACHD has not yet approached ITD concerning the change in maintenance responsibilities.
- ACHD has the existing opportunity to acquire all or part of SH-69.
- ITD's Traffic Division and Development Services Division have conceptually approved a private approach as the fourth leg to the existing SH-69 intersection with East Kuna Road. ITD has not received a formal application for this approach.

- The submitted traffic study does not identify the need for a traffic signal at the intersection of SH-69 with Kuna Road. Additional analyses are needed to justify the construction of a new traffic signal, if proposed.
- ITD's Access management Policy (IDAPA 39.03.42) requires that site driveways have a separation distance of:
    - 250-ft between private approaches
    - 250-ft between any approach and an upstream public street intersection
    - 660-ft between any approach and a downstream public street intersection
    - 660-ft between public street intersections
    - 2,640-ft between signalized intersections
- The proposed site plan appears to meet current ITD policies, with the exception of the western approach on East Avalon (SH-69). The minimum required separation distance is 250-ft from both Sailer Place and Sunbird Avenue.
- The western approach on East Avalon may be turn-restricted in the future.
- ITD has not received a formal application from this applicant for any public or private approach within the SH-69 corridor. A formal application is required for any application. The applicants should contact MS Shona Cheever (208.334.8341) in ITD's Development Services Division for additional information.
- ITD anticipates reducing the speed limit on SH-69 to 35 MPH south of the site's northern boundary. The change is anticipated with the increase in activity and traffic volumes at the new intersection.
- ITD typically requires that any City-mandated curb, gutter or sidewalk be located outside of the public right-of-way on high-speed roadways. This section of SH-69 is expected to be signed for a 35 MPH. Curb, gutter and sidewalk are possible.
- ITD typically allows roadway lighting within the public right-of-way if the lighting is part of an intersection improvement or an extension of an existing lightened area.
- ITD typically supports private landscaping within the ITD right-of-way. A permit is required and some restrictions apply. The applicants should contact MS Shona Cheever (208.334.8341) in ITD's Development Services Division for additional information.
- ITD has comprehensive rules governing outdoor advertising. Any proposed signs adjacent to the state highways are required to meet standards for the size, location and height requirements of IDAPA 39.03.60. IDAPA also requires that signs not "dazzle or blind" drivers. The current trend toward high intensity signs has caused an increasing number of driver complaints on urban segments of the State Highway System. This applicant should be aware of the issue and plan the sign's lighting strategy accordingly. The applicants are encouraged to contact ITD's Right-of-Way Supervisor, MS Lana Servatius, at 208.334.8343 for detailed information.

ITD has the following suggestions for project approval:

1. Comply with ITD policies for approach location on SH-69.
2. Comply with ITD policies concerning curb, gutter and sidewalk outside the public right-of-way.

3. Comply with ITD policies concerning roadway lighting.
4. Comply with ITD policies concerning outdoor advertising.

If you have any questions, you may contact me at 334-8377.

Sincerely,

Dave Szplett
Development Services Manager
dave.szplett@itd.idaho.gov

Kuna Rural Fire District

From the Desk of
Jon Tillman
Asst. Fire Chief

Ph. 922-1144
Fax 922-1135
P.O. Box 607
Kuna, ID. 83634

TO: Steve Arnold

DATE: May 24, 2013

RE: Merlin Pointe subdivision

The Kuna Rural Fire District has the following comments on this proposed project.

-N. Merlin AVE. at E. Ensolorado ST. is in excess of the 150 foot maximum as per I.F.C. 2009 standards therefore would require an appropriate turnaround.

-An additional 5 hydrants would need to be added along Kuna and Meridian Roads with placement approved by the Fire Chief or his designee.

-The hydrant system would need to be looped therefore continuous.

Please feel free to contact me at the District office should you have any questions or concerns.

Sincerely,

Jon Tillman

RICHARD MURGOITIO
CHAIRMAN OF THE BOARD

KENNETH COLE
VICE CHAIRMAN OF THE BOARD

TIMOTHY M. PAGE
PROJECT MANAGER

ROBERT D. CARTER
ASSISTANT PROJECT MANAGER

APRYL GARDNER
SECRETARY-TREASURER

JERRI FLOYD
ASSISTANT SECRETARY-TREASURER

BOISE PROJECT BOARD OF CONTROL

(FORMERLY BOISE U.S. RECLAMATION PROJECT)

2465 OVERLAND ROAD
BOISE, IDAHO 83705-3155

OPERATING AGENCY FOR 167,000 ACRES FOR THE FOLLOWING IRRIGATION DISTRICTS

NAMPA-MERIDIAN DISTRICT
BOISE-KUNA DISTRICT
WILDER DISTRICT
NEW YORK DISTRICT
BIG BEND DISTRICT

TEL: (208) 344-1141
FAX: (208) 344-1437

RECEIVED
KUNA CITY CLERK

23 April 2013

City of Kuna
P.O. Box 13
Kuna, Idaho 83634

RE: A-Team Consultants
1380 East Kuna Rd.
Boise-Kuna Irrigation District
Teed Lateral 135+60, 151+80
Badley Lateral 00+00
Sec. 24, T2N, R1W, BM.

13-01-AN, 13-01-ZC, 13-01-S, 13-01-DA

BK-386, BK-1240

Troy Behunin:

The United States' Teed Lateral and the Badley Lateral lie within the boundary of the above-mentioned location. The easements for these laterals are held in the name of the United States through the Bureau of Reclamation under the authority of the Act of August 30, 1890. (26 Stat. 391; 43 U.S.C. 945)

The Boise Project Board of Control is contracted to operate and maintain these laterals. We assert the federal easement 30 feet northerly and 25 feet southerly of the Teed Lateral's centerline and we assert 21 feet easterly and 18 westerly of the Badley Lateral's centerline. Whereas these areas are for the operation and maintenance of our facilities, no activity should hinder our ability to do so.

The Boise Project does not approve landscaping (other than grass) within its easements, as this will certainly increase our cost of maintenance.

Fencing (as may be required) must be constructed just off the laterals' easement, to insure public safety and prevent encroachments.

Parking lots, curbing, light poles, signs, etc. and the placing of asphalt and/or cement over Project facility easements must be approved by Boise Project Board of Control prior to construction.

Project facilities and/or easements that parallel, and are within and/or intended to be within road right-of-ways due to any development of this property must be relocated

outside of road right-of-ways. The easements of Boise Project facilities will remain the same unless agreed upon and/or approved with written permission from Boise Project Board of Control.

The construction of any roadway crossings must be conducted only during the non-irrigation season when the lateral is dewatered. In any case no work shall take place within the easement before the proper crossing agreements have been secured through the Bureau of Reclamation and the Boise Project Board of Control.

Utilities planning to cross any project facility must do so in accordance with the master policies now held between the Bureau of Reclamation and most of the utilities. In any case, no work shall take place within the easement before proper crossing agreements have been secured through both the Bureau of Reclamation and the Boise Project Board of Control.

Crossing agreements must be secured and signed by all parties prior to March 1st of each year. A time schedule for the construction to be done during the non-irrigation season must be approved by Boise Project prior to any activity within Project easements. No construction will be allowed within the easement boundaries of the Boise Project Board of Control facilities after March 15th of each year. However, on a case by case, overhead utilities and utilities boring underneath a Project facility may be allowed after March 15th if reviewed and approved by the Boise Project.

The piping and relocation of any Lateral, Canal and/or Drain must be reviewed and approved by the Project and is (to include all appurtenant boxes and/or structures) and must be warranted by the landowner for a period of (5) five-years. The Warrantee Agreement must be secured prior to ANY disturbance of that facility.

Boise Project Board of Control must approve any requests and/or relocation of delivery points prior to construction.

Since this development is changing from agricultural farm ground to developed land, the Boise Project Board of Control will not accept ANY return flows into our system.

Storm Drainage and/or Street Runoff must be retained on site.

NO DISCHARGE into any live irrigation system is permitted.

Local irrigation/drainage ditches that cross this property, in order to serve neighboring properties, must remain unobstructed and protected by an appropriate easement.

Should there be any small (neighborhood) irrigation ditches on this site, the developers and/or landowners will be obligated to protect them and allow water to pass to downstream neighbors.

This development is subject to Idaho Code 31-3805, in accordance, this office is requesting a copy of the irrigation and drainage plans.

Whereas this property lies within the Boise-Kuna Irrigation District it is important that representatives of this development contact the BKID office as soon as possible to discuss a pressure system prior to any costly design work. If applicable, the irrigation system will have to be built to specific specifications as set by the District / Project.

If the irrigation system will be incorporated into the City of Kuna's pressure system, Boise Project Board of Control will require confirmation from both the City of Kuna and the Boise-Kuna Irrigation District.

Boise Project Board of Control must receive a written response from the Boise-Kuna Irrigation District as to who will own and operate the pressure irrigation system prior to review and approval of an irrigation plan by Boise Project Board of Control.

Wording on the preliminary and final recorded plat needs to state that any proposed and/or future usage of the Boise Project Board of Control facilities are subject to Idaho Statues, Title 42-1209.

Whereas this development is in its preliminary stages, Boise Project Board of Control reserves the right to review plans and require changes when our easements and/or facilities are affected by unknown factors.

If you have any further questions or comments regarding this matter, please do not hesitate to contact me at (208) 344-1141.

Sincerely,

Bob Carter

Bob Carter
Assistant Project Manager- BPBC

bdc/bc

cc:	Phil Comegys	Watermaster, Div; 2 BPBC
	Lauren Boehlke	Secretary – Treasurer, BKID
	File	

CENTRAL DISTRICT HEALTH DEPARTMENT

Environmental Health Division

CENTRAL DISTRICT HEALTH DEPARTMENT

Return to:

- ☐ ACZ
- ☐ Boise
- ☐ Eagle
- ☐ Garden City
- ☒ Kuna
- ☐ Meridian
- ☐ Star

Rezone # 13-01-ZC

Conditional Use #

Preliminary / Final / Short Plat 13-01-AN / 13-01-S / 13-01-DA Merlin Pointe

RECEIVED

KUNA CITY CLERK

☐ 1. We have No Objections to this Proposal.

☐ 2. We recommend Denial of this Proposal.

☐ 3. Specific knowledge as to the exact type of use must be provided before we can comment on this Proposal.

☐ 4. We will require more data concerning soil conditions on this Proposal before we can comment.

☐ 5. Before we can comment concerning individual sewage disposal, we will require more data concerning the depth of:
- ☐ high seasonal ground water
- ☐ bedrock from original grade
- ☐ waste flow characteristics
- ☐ other _____

☐ 6. This office may require a study to assess the impact of nutrients and pathogens to receiving ground waters and surface waters.

☐ 7. This project shall be reviewed by the Idaho Department of Water Resources concerning well construction and water availability.

☒ 8. After written approval from appropriate entities are submitted, we can approve this proposal for:
- ☒ central sewage
- ☐ interim sewage
- ☐ individual sewage
- ☐ community sewage system
- ☒ central water
- ☐ individual water
- ☐ community water well

☒ 9. The following plan(s) must be submitted to and approved by the Idaho Department of Environmental Quality:
- ☒ central sewage
- ☐ sewage dry lines
- ☐ community sewage system
- ☒ central water
- ☐ community water

☐ 10. This Department would recommend deferral until high seasonal ground water can be determined if other considerations indicate approval.

☐ 11. If restroom facilities are to be installed, then a sewage system MUST be installed to meet Idaho State Sewage Regulations.

☐ 12. We will require plans be submitted for a plan review for any:
- ☐ food establishment
- ☐ beverage establishment
- ☐ swimming pools or spas
- ☐ grocery store
- ☐ child care center

☒ 13. Infiltration beds for storm water disposal are considered shallow injection wells. An application and fee must be submitted to CDHD.

☐ 14. _____

Reviewed By: [signature]

Date: 4/17/13

Review Sheet

15726-001EH1111

STATE OF IDAHO
DEPARTMENT OF ENVIRONMENTAL QUALITY
BOISE REGIONAL OFFICE
1445 North Orchard Street•Boise, ID 83706-2239•(208) 373-0550

DEQ Response to Request for Environmental Comment

Date:	*4/15/2013*
Agency Requesting Comments:	*City of Kuna Planning and Zoning*
Date Request Received:	*4/10/2013*
Applicant/Description:	*13-01-AN (Annexation)/13-01-ZC (Zone Change)/13-01-S (Subdivision)/13-01-DA (Development Agreement)*

Thank you for the opportunity to respond to your request for comment. While DEQ does not review projects on a project-specific basis, we attempt to provide the best review of the information provided. DEQ encourages agencies to review and utilize the Idaho Environmental Guide to assist in addressing project-specific conditions that may apply. This guide can be found at http://www.deq.idaho.gov/ieg/.

The following information does not cover every aspect of this project; however, we have the following general comments to use as appropriate:

1. Air Quality

- *Please review IDAPA 58.01.01 for all rules on Air Quality, especially those regarding fugitive dust (58.01.01.651), trade waste burning (58.01.01.600-617), and odor control plans (58.01.01.776).*

  For questions, contact David Luft, Air Quality Manager, at 373-0550.

- *IDAPA 58.01.01.201 requires an owner or operator of a facility to obtain an air quality permit to construct prior to the commencement of construction or modification of any facility that will be a source of air pollution in quantities above established levels. DEQ asks that cities and counties require a proposed facility to contact DEQ for an applicability determination on their proposal to ensure they remain in compliance with the rules.*

  For questions, contact the DEQ Air Quality Permitting Hotline at 1-877-573-7648.

2. Wastewater and Recycled Water

- *DEQ recommends verifying that there is adequate sewer to serve this project prior to approval. Please contact the sewer provider for a capacity statement, declining balance report, and willingness to serve this project.*

- *IDAPA 58.01.16 and IDAPA 58.01.17 are the sections of Idaho rules regarding wastewater and recycled water. Please review these rules to determine whether this or future projects will require DEQ approval. IDAPA 58.01.03 is the section of Idaho rules regarding subsurface disposal of wastewater. Please review this rule to determine whether this or future projects will require permitting by the district health department.*

All projects for construction or modification of wastewater systems require preconstruction approval. Recycled water projects and subsurface disposal projects require separate permits as well.

- *DEQ recommends that projects be served by existing approved wastewater collection systems or a centralized community wastewater system whenever possible. Please contact DEQ to discuss potential for development of a community treatment system along with best management practices for communities to protect ground water.*

- *DEQ recommends that cities and counties develop and use a comprehensive land use management plan, which includes the impacts of present and future wastewater management in this area. Please schedule a meeting with DEQ for further discussion and recommendations for plan development and implementation.*

For questions, contact Todd Crutcher, Engineering Manager, at 373-0550.

3. <u>Drinking Water</u>

- *DEQ recommends verifying that there is adequate water to serve this project prior to approval. Please contact the water provider for a capacity statement, declining balance report, and willingness to serve this project.*

- *IDAPA 58.01.08 is the section of Idaho rules regarding public drinking water systems. Please review these rules to determine whether this or future projects will require DEQ approval.*

  All projects for construction or modification of public drinking water systems require preconstruction approval.

- *DEQ recommends verifying if the current and/or proposed drinking water system is a regulated public drinking water system (refer to the DEQ website at http://www.deq.idaho.gov/water-quality/drinking-water.aspx). For non-regulated systems, DEQ recommends annual testing for total coliform bacteria, nitrate, and nitrite.*

- *If any private wells will be included in this project, we recommend that they be tested for total coliform bacteria, nitrate, and nitrite prior to use and retested annually thereafter.*

- *DEQ recommends using an existing drinking water system whenever possible or construction of a new community drinking water system. Please contact DEQ to discuss this project and to explore options to both best serve the future residents of this development and provide for protection of ground water resources.*

- *DEQ recommends cities and counties develop and use a comprehensive land use management plan which addresses the present and future needs of this area for adequate, safe, and sustainable drinking water. Please schedule a meeting with DEQ for further discussion and recommendations for plan development and implementation.*

For questions, contact Todd Crutcher, Engineering Manager at 373-0550.

4. <u>Surface Water</u>

- *A DEQ short-term activity exemption (STAE) from this office is required if the project will involve de-watering of ground water during excavation and discharge back into surface water, including a description of the water treatment from this process to prevent*

excessive sediment and turbidity from entering surface water.

- *Please contact DEQ to determine whether this project will require a National Pollution Discharge Elimination System (NPDES) Permit. If this project disturbs more than one acre, a stormwater permit from EPA may be required.*

- *If this project is near a source of surface water, DEQ requests that projects incorporate construction best management practices (BMPs) to assist in the protection of Idaho's water resources. Additionally, please contact DEQ to identify BMP alternatives and to determine whether this project is in an area with Total Maximum Daily Load stormwater permit conditions.*

- *The Idaho Stream Channel Protection Act requires a permit for most stream channel alterations. Please contact the Idaho Department of Water Resources (IDWR), Western Regional Office, at 2735 Airport Way, Boise, or call 208-334-2190 for more information. Information is also available on the IDWR website at:* http://www.idwr.idaho.gov/WaterManagement/StreamsDams/Streams/AlterationPermit/AlterationPermit.htm

- *The Federal Clean Water Act requires a permit for filling or dredging in waters of the United States. Please contact the US Army Corps of Engineers, Boise Field Office, at 10095 Emerald Street, Boise, or call 208-345-2155 for more information regarding permits.*

  For questions, contact Lance Holloway, Surface Water Manager, at 373-0550.

5. Hazardous Waste And Ground Water Contamination

- ***Hazardous Waste.*** *The types and number of requirements that must be complied with under the federal Resource Conservations and Recovery Act (RCRA) and the Idaho Rules and Standards for Hazardous Waste (IDAPA 58.01.05) are based on the quantity and type of waste generated. Every business in Idaho is required to track the volume of waste generated, determine whether each type of waste is hazardous, and ensure that all wastes are properly disposed of according to federal, state, and local requirements.*

- *No trash or other solid waste shall be buried, burned, or otherwise disposed of at the project site. These disposal methods are regulated by various state regulations including Idaho's Solid Waste Management Regulations and Standards, Rules and Regulations for Hazardous Waste, and Rules and Regulations for the Prevention of Air Pollution.*

- ***Water Quality Standards.*** *Site activities must comply with the Idaho Water Quality Standards (IDAPA 58.01.02) regarding hazardous and deleterious-materials storage, disposal, or accumulation adjacent to or in the immediate vicinity of state waters (IDAPA 58.01.02.800); and the cleanup and reporting of oil-filled electrical equipment (IDAPA 58.01.02.849); hazardous materials (IDAPA 58.01.02.850); and used-oil and petroleum releases (IDAPA 58.01.02.851 and 852).*

  Petroleum releases must be reported to DEQ in accordance with IDAPA 58.01.02.851.01 and 04. Hazardous material releases to state waters, or to land such that there is likelihood that it will enter state waters, must be reported to DEQ in accordance with IDAPA 58.01.02.850.

- ***Ground Water Contamination.*** *DEQ requests that this project comply with Idaho's Ground Water Quality Rules (IDAPA 58.01.11), which states that "No person shall*

cause or allow the release, spilling, leaking, emission, discharge, escape, leaching, or disposal of a contaminant into the environment in a manner that causes a ground water quality standard to be exceeded, injures a beneficial use of ground water, or is not in accordance with a permit, consent order or applicable best management practice, best available method or best practical method."

For questions, contact Michael McCurdy, Waste & Remediation Manager, at 373-0550.

6. ***Additional Notes***
   - *If an underground storage tank (UST) or an aboveground storage tank (AST) is identified at the site, the site should be evaluated to determine whether the UST is regulated by DEQ. EPA regulates ASTs. UST and AST sites should be assessed to determine whether there is potential soil and ground water contamination. Please call DEQ at 373-0550, or visit the DEQ website (http://www.deq.idaho.gov/waste-mgmt-remediation/storage-tanks.aspx) for assistance.*

   - *If applicable to this project, DEQ recommends that BMPs be implemented for any of the following conditions: wash water from cleaning vehicles, fertilizers and pesticides, animal facilities, composted waste, and ponds. Please contact DEQ for more information on any of these conditions.*

We look forward to working with you in a proactive manner to address potential environmental impacts that may be within our regulatory authority. If you have any questions, please contact me, or any our technical staff at 208-373-0550.

Sincerely,

Danielle Robbins

Danielle Robbins
danielle.robbins@deq.idaho.gov
Boise Regional Office
Idaho Department of Environmental Quality

C: File # 1853

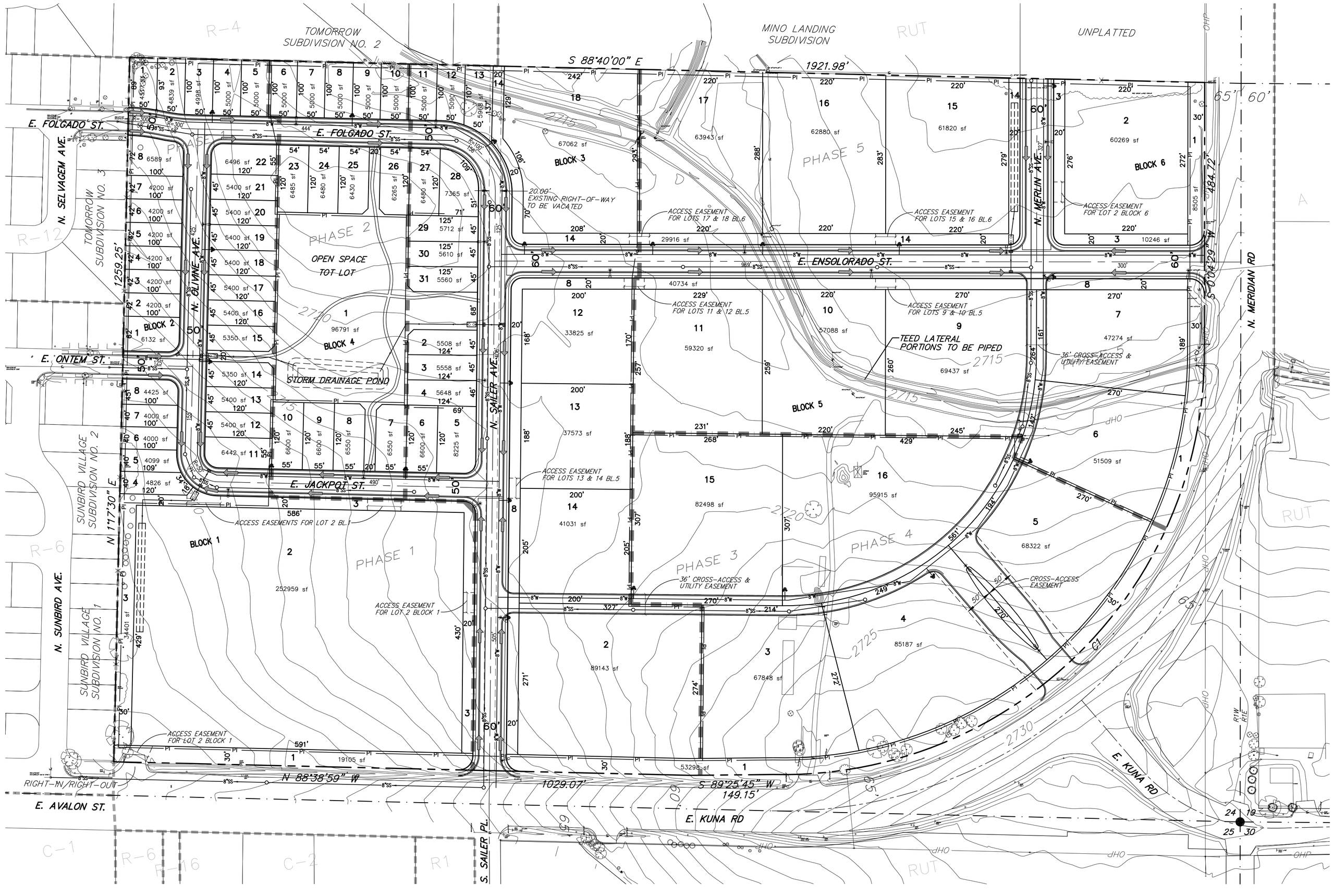

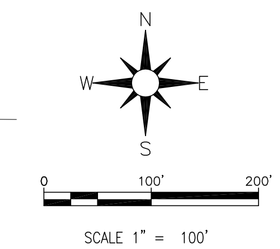

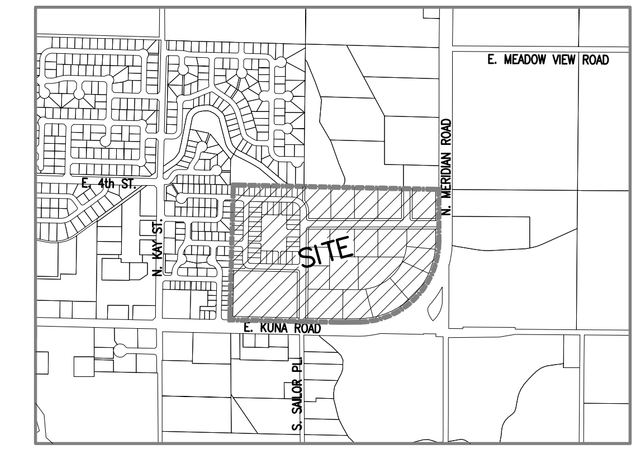

VICINITY MAP
N.T.S.

NOTES

1. KUNA CITY WATER AND SEWER SERVICE SHALL BE EXTENDED TO ALL LOTS.
2. SUBJECT PROPERTY DOES NOT FALL WITHIN ANY FEMA FLOOD HAZARD ZONE–REFERENCE FIRM PANEL 16001C0250J, DATED OCT. 2, 2003.
3. ALL LOT SHALL HAVE A PERMANENT EASEMENT FOR PUBLIC UTILITIES, STREET LIGHTS, IRRIGATION AND LOT DRAINAGE OVER THE 10 (TEN) FEET ADJACENT TO ANY PUBLIC STREET. EXCEPT FOR LOTS 4–8, BLOCK 1; LOTS 1–8, BLOCK 2; LOTS 1–13, BLOCK 3; AND LOTS 2–31, BLOCK 4, OR AS OTHERWISE SHOWN, THERE SHALL BE A 5 (FIVE) FOOT PUBLIC UTILTY, IRRIGATION AND LOT DRAINAGE EASEMENT ADJACENT TO ANY LOT LINE NOT ADJACENT TO A PUBLIC STREET.
4. MINIMUM BUILDING SETBACK LINES SHALL BE IN ACCORDANCE WITH THE APPLICABLE STANDARDS OF THE CITY OF KUNA AT THE TIME OF ISSUANCE OF THE BUILDING PERMIT.
5. THE DEVELOPER SHALL PROVIDE PRESSURIZED IRRIGATION WATER TO EACH LOT. ANNEXATION OF SURFACE WATER RIGHTS INTO THE KMID WILL BE REQUESTED.
6. STORM DRAINAGE SHALL BE RETAINED ON SITE THROUGH SURFACE AND SUBSURFACE FACILITES AS APPROVED BY ACHD.
7. LOTS 1 & 3, BLOCK 1; LOT 14, BLOCK 3; LOT 1, BLOCK 4; LOTS 1 & 8, BLOCK 5; AND LOTS 1 & 3, BLOCK 6 ARE COMMON LOTS TO BE OWNED AND MAINTAINED BY THE MERLIN LOT OWNERS ASSOCIATION OR ITS ASSIGNS.

PRELIMINARY DEVELOPMENT FEATURES

TOTAL ACRES	52.92 ACRES
TOTAL LOTS	84
COMMON/OPEN SPACE LOTS	8
COMMERCIAL LOTS	20
RESIDENTIAL LOTS	56
RESIDENTIAL AREA	11.46 ACRES
RESIDENTIAL DENSITY	4.9 UNITS/Ac.
CURRENT ZONING	RUT
PROPOSED ZONING	C–1
OPEN SPACE LOTS:	
INTERIOR LANDSCAPE BUFFER AREA:	2.42 ACRES
ARTERIAL LANDSCAPE BUFFER AREA:	1.86 ACRES
PARK/TOT LOT:	2.22 ACRES
STREET CENTERLINE	4,444 L.F.

DEVELOPER / OWNER
TFI LP
P.O. BOX 690
MERIDIAN, ID 83680

SURVEYOR
LAND SOLUTIONS
231 E. 5th ST.
MERIDIAN, ID 83642
(208) 288-2040

PLANNER / CONTACT
STEVE ARNOLD
A-TEAM LAND CONSULTANTS
1785 WHISPER COVE AVE.
BOISE, ID 83709
208-871-7020

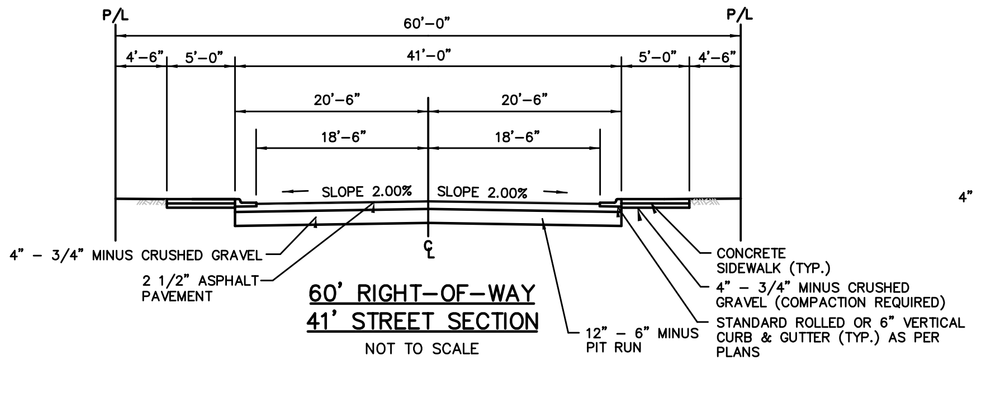

60' RIGHT-OF-WAY
41' STREET SECTION
NOT TO SCALE

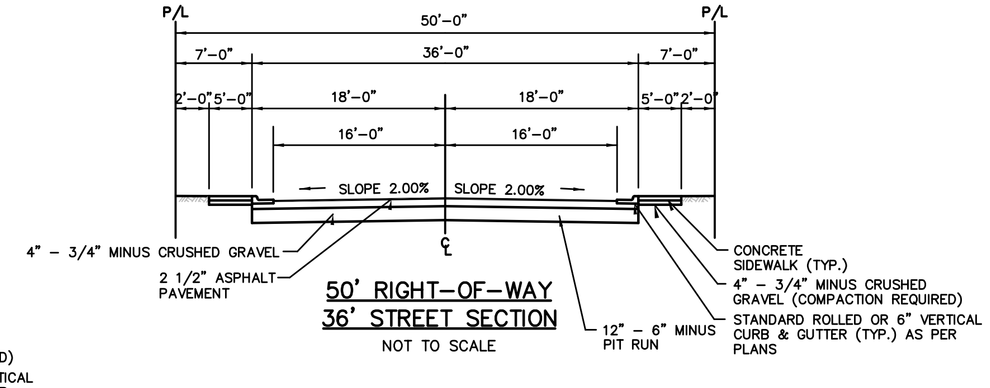

50' RIGHT-OF-WAY
36' STREET SECTION
NOT TO SCALE

LEGEND

BOUNDARY
PHASE LINE
RIGHT-OF-WAY LINE
LOT LINE
CENTER OF ROAD
SANITARY SEWER W/MANHOLE
WATER
PRESSURE IRRIGATION
CURB & GUTTER
SIDEWALK
EASEMENT LINE
5' CONTOUR
1' CONTOUR
EXISTING SANITARY SEWER
EXISTING WATER
EXISTING IRRIGATION
EXISTING CURB & SIDEWALK
ZONING BOUNDARY
LOT NUMBER
CATCH BASIN & STORM DRAIN LINE
SAND & GREASE TRAP
SEEPAGE BED
DRAINAGE FLOW
FIRE HYDRANT
STREET LIGHT

CURVE DATA

CURVE	LENGTH	RADIUS	DELTA	CHORD	BEARING
C1	1200.47'	753.51'	91°16'56"	1077.48'	N 45°42'39" E

MERLIN SUBDIVISION

PRELIMINARY PLAT
SECTION 24, T.2N., R.1W., B.M.
CITY OF KUNA, ADA COUNTY, IDAHO

A Team Land Consultants
Committed to You!

SHEET 1 OF 1

DRAWN BY: BKB
DATE: 02/26/13
FILE: MERLIN PRE.DWG

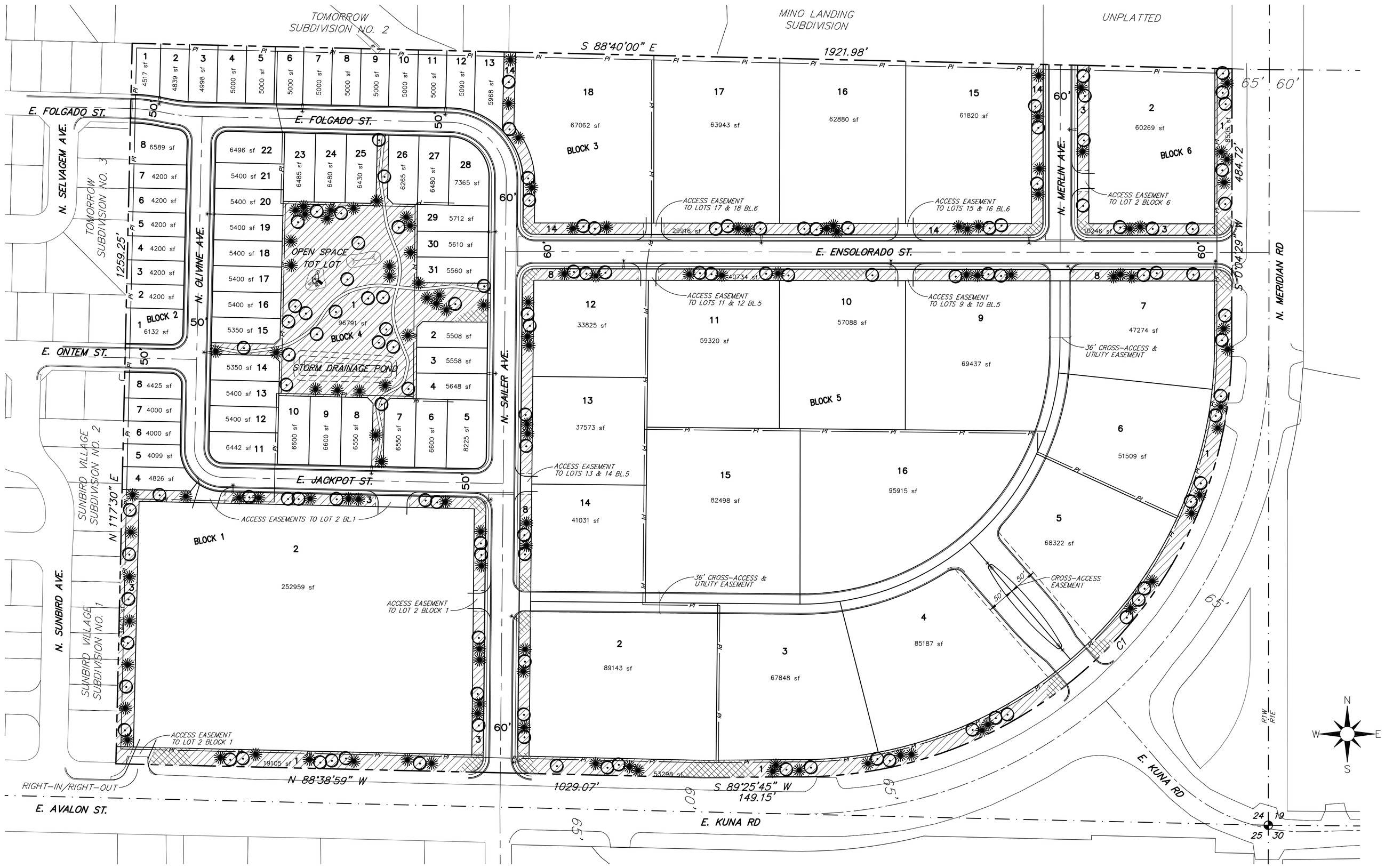

PLANT SCHEDULE

KEY	BOTANICAL NAME	COMMON NAME	SIZE
DECIDUOUS SHADE TREES			
AG	Acer ginnala 'Flame' Multi-stem	Flame Maple	2" CAL B&B
AR	Acer rubrum 'Red Sunset'	Red Sunset Maple	2" CAL B&B
AT	Acer truncatum x Acer platanoides	Norwegian Sunset Maple	2" CAL B&B
BN	Betula nigra 'Heritage'	Heritage River Birch	2" CAL B&B
CB	Carpinus betulus 'Fastigiata'	Pyramidal European Hornbeam	2" CAL B&B
FA	Fraxinus americana 'Junginger'	Autumn Purple Ash	2" CAL B&B
FP	Fraxinus pennsylvanica 'Urbanite'	Urbanite Ash	2" CAL B&B
FR	Fraxinus pennsylvanica 'Patmore'	Patmore Ash	2" CAL B&B
GT	Gleditsia triacanthos inermis 'Skycole'	Skyline Honeylocust	2" CAL B&B
LS	Liriodendron tulipifera	Tulip Tree	2" CAL B&B
LT	Liquidambar styraciflua	Sweetgum	2" CAL B&B
ORNAMENTAL FLOWERING TREES			
CC	Cercis canadensis	Eastern Redbud	2" CAL B&B
MR	Malus 'Royalty'	Royalty Crabapple	2" CAL B&B
MS	Malus 'Spring Snow'	Spring Snow Crabapple	2" CAL B&B
PC	Pyrus calleryana 'Chanticleer'	Chanticleer Pear	2" CAL B&B
PS	Prunus serrulata 'Royal Burgundy'	Royal Burgundy Cherry	2" CAL B&B
CONIFEROUS TREES			
PN	Pinus nigra	Austrian Pine	6'-7' B&B
PI	Picea abies	Norway Spruce	6'-7' B&B
SHRUBS/PERENNIALS/ORNAMENTAL GRASSES			
BT	Berberis thunbergii atropurpurea 'Crimson Pygmy'	Crimson Pygmy Barberry	#2
CA	Calamagrostis x acutifolia 'Karl Foerster'	Foerster's Feather Reed Grass	#1
CI	Cornus alba 'Bailhalo'	Ivory Halo Dogwood	#5
CS	Cornus sericea 'Kelseyi'	Kelsey Dogwood	#5
FS	Fagus sylvatica 'Purpurea Pendula'	Weeping Purple Beech	4' HT. B&B
GS	Geranium sanguineum	Bloody Cranesbill	#1
HB	Heuchera 'Beauty of Color'	Beauty of Color Coral Bells	#1
HE	Helictotrichon sempervirens 'Saphirsprudel'	Saphire Fountain Blue Oat Grass	#1
HS	Hemerocallis 'Stella de Oro'	Stella de Oro Daylily	#1
HO	Hosta x 'Patriot'	Patriot Plantain Lilly	#1
MR	Mahonia repens	Creeping Mahonia	#2
PA	Pennisetum alopecuroides 'Hameln'	Dwarf Fountain Grass	#1
PM	Pinus mugo pumilio	Dwarf Mugo Pine	#5
RN	Rosa x 'Noalesa'	Yellow Flower Carpet Groundcover Rose	#2
RP	Rhododendron x 'P.J.M.'	P.J.M. Rhododendron	#5
SB	Spirea bumalda 'Goldflame'	Goldflame Spirea	#1
SI	Iris siberica 'Caesar's Brother'	Caesar's Brother Siberian Iris	#1
SN	Sambucus nigra 'Gerda'	Black Beauty Elderberry	#5
TC	Taxus x media 'Densiformis'	Dense Spreading Yew	#5
WF	Weigela florida 'Variegata Nana'	Variegated Weigela	#5

LANDSCAPE & IRRIGATION NOTES:

1. Contractor shall report to landscape architect all conditions which impair and/or prevent the proper execution of this work, prior to beginning work.
2. Coordinate work schedule and observations with landscape architect prior to construction start-up.
3. New conifer and deciduous tree planting, see detail B and C/L1.0. Contractor shall stake all trees deemed necessary, i.e..... from being blown over, planted with loose root ball, etc. Contractor's option.
4. New shrub planting. See detail A/L1.0.
5. All plant material shall conform to the American Nurseryman Standards for type and size shown. Plants will be rejected if not in a sound and healthy condition.
6. All planting beds shall be covered with a minimum of 3" of small (1" minus) bark chips. Submit for approval.
7. All plant material shall be guaranteed for a period of one year beginning at the date of acceptance by Owner. Replace all plant material found dead or not in a healthy condition immediately with the same size and species at no cost to the Owner.
8. Finish grades to be smooth and even gradients with positive drainage in accordance with site grading plan.
9. In all planter bed and lawn areas, the top 6 inches of topsoil will be amended at a ratio of 3 cubic yards of organic matter per 1000 square feet. Roto-till organic matter a minimum of 6 inches into topsoil.
10. Fertilize all trees and shrubs with Agriform planting tablets. Quantity per manufacturer's recommendations.
11. All planting beds shall have a minimum of 18" of topsoil. Lawn areas shall have a minimum of 12" topsoil. Spread, compact and fine grade topsoil to a smooth and uniform grade 3" below surface of walks and curbs in planting bed areas, 1 1/2" at sod lawn areas, and 1" at seed lawn areas.
12. Reuse existing surface topsoil stockpiled on the site. Verify suitability of surface soil to produce topsoil meeting requirements and amend when necessary. Topsoil shall be a loose, friable, sandy loam, clean and free of toxic materials, noxious weeds, weed seeds, rocks, grass or other foreign material and a ph of 5.5 to 7.0. If on-site topsoil does not meet these minimum standards, contractors are responsible to either: a) provide approved imported topsoil, or b.) improve on-site topsoil with methods approved by landscape architect. Supplement withimported topsoil when quantities are insufficient. Clean topsoil of roots, plants, sods, stones, clay lumps and other extraneous materials harmful to plant growth.
    If imported topsoil from off-site sources is required, provide new topsoil that is fertile, friable, natural loam, surface soil, reasonably free of subsoil, clay lumps, brush, weeds and other litter, and free of roots, stumps, stones larger than 2 inches in any dimension, and other extraneous or toxic matter harmful to plant growth.
    a. Obtain topsoil from local sources or from areas having similar soil characteristics to that found at project site. Obtain topsoil only from naturally, well-drained sites where topsoil occurs in a depth of not less than 4 inches.
    b. Representative samples shall be tested for acidity, fertility and general texture by a recognized commercial or government agency and copies of the testing agency's findings and recommendations shall be furnished to the Architects representative by the contractor. No topsoil shall be delivered in a frozen or muddy condition. Acidity/alkalinity range - Ph. 5.5 to 7.6.
13. Immediately clean up any topsoil or other debris on the site created from landscape operations and dispose of properly off site.
14. All landscaped areas shall have an automatic underground sprinkler system which insures complete coverage and properly zoned for required water uses. Each hydrozone is to be irrigated with separate individual stations.
15. Planter beds and lawn areas are to have separate hydro-zones.
16. Pop-up sprinkler heads shall have a minimum riser height of 4 inches at lawn areas and 18" at planter beds.
17. Planter beds are to have drip irrigation systems or pop-up spray systems. Annuals, perennials ground covers or shrub massings shall have a pop-up spray system.
18. Electronic water distribution/ timing controllers are to be provided. Minimum controller requirements are as follows:
    - Precise individual station timing
    - Run time capabilities for extremes in precipitation rates
    - At least one program for each hydrozone
    - Sufficient multiple cycles to avoid water run-off
    - Power failure backup for all programed individual valved watering stations will be designed and installed to provide water to respective hydro-zones.

SCALE 1" = 100'

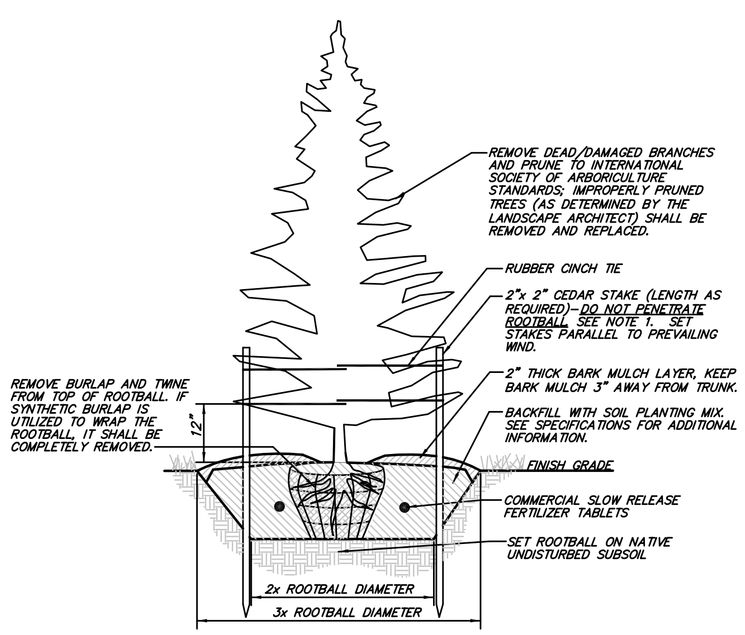

CONIFEROUS TREE PLANTING

NOT TO SCALE

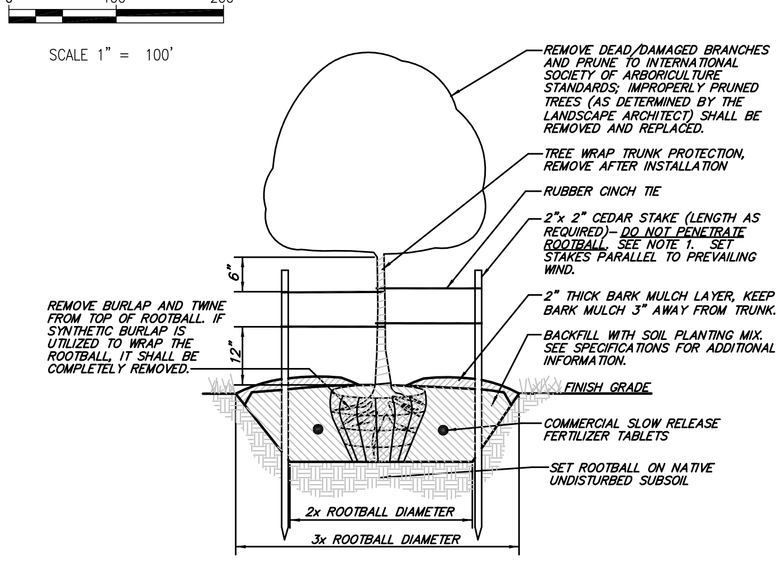

DECIDUOUS TREE PLANTING

NOT TO SCALE

TREE PLANTING NOTES

1. THE STAKING OF TREES IS TO BE THE CONTRACTOR'S OPTION; HOWEVER, THE CONTRACTOR IS RESPONSIBLE TO INSURE THAT ALL TREES ARE PLANTED STRAIGHT AND THAT THEY REMAIN STRAIGHT FOR A MINIMUM OF 1 YEAR. ALL STAKING SHALL BE REMOVED AT THE END OF THE ONE YEAR WARRANTY PERIOD.
2. REMOVAL OF BURLAP AND TWINE FROM TOP OF ROOTBALL MAY BE POSTPONED FOR 90 DAYS AT CONTRACTOR'S OPTION.
3. IN THE EVENT OF A QUESTION OR LACK OF CLARITY ON THE DRAWINGS, THE CONTRACTOR IS TO NOTIFY THE LANDSCAPE ARCHITECT BEFORE PROCEEDING.
4. LANDSCAPE CONTRACTOR IS TO NOTIFY THE LANDSCAPE ARCHITECT AND OWNER PRIOR TO INSTALLATION OF PLANT MATERIAL.
5. WRAP RUBBER CINCH TIES AROUND THE TREE TRUNKS AND STAKES USING EITHER THE STANDARD OR FIGURE EIGHT TYING METHOD. SECURE THE TIES TO THE STAKES WITH GALVANIZED NAILS TO PREVENT SLIPPAGE.
6. DEEP SOAK TREE TWICE WITHIN THE FIRST 24 HOURS.
7. IN THE EVENT HARDPAN SOILS PREVENT TREE PLANTING AS DETAILED, NOTIFY THE LANDSCAPE ARCHITECT IMMEDIATELY.

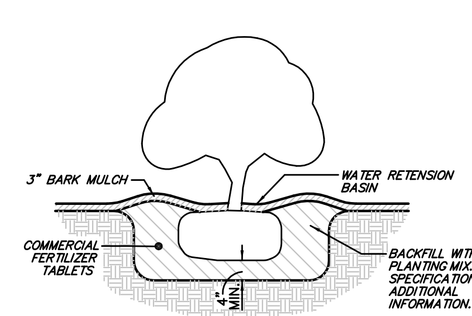

SHRUB PLANTING

NOT TO SCALE

- LAWN AREA (SOD)
- SHRUB/PLANTER AREA

DEVELOPER / OWNER
TFI LP
P.O. BOX 690
MERIDIAN, ID 83680

LANDSCAPE DESIGNER
POWER ENTERPRISES
16131 FRANKLIN BLVD.
NAMPA, ID 83687
(208) 461-4670

PLANNER / CONTACT
STEVE ARNOLD
A-TEAM LAND CONSULTANTS
1785 WHISPER COVE AVE.
BOISE, ID 83709
208-871-7020

MERLIN SUBDIVISION

PRELIMINARY LANDSCAPE PLAN
SECTION 24, T.2N., R.1W., B.M.
CITY OF KUNA, ADA COUNTY, IDAHO

A Team Land Consultants — Committed to You!

SHEET 1 OF 1

DRAWN BY:
DATE: 02/26/13
FILE: MERLIN LND.DWG

Vicinity Map

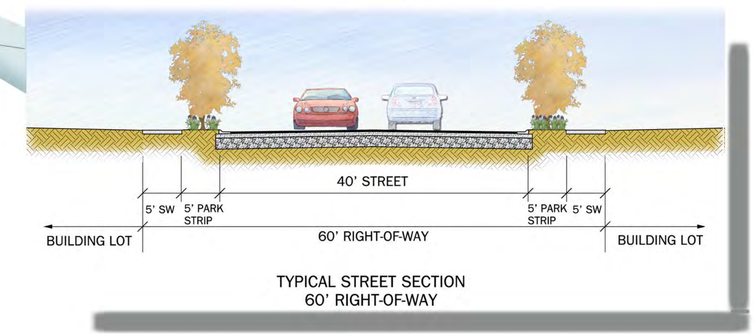

TYPICAL STREET SECTION
60' RIGHT-OF-WAY

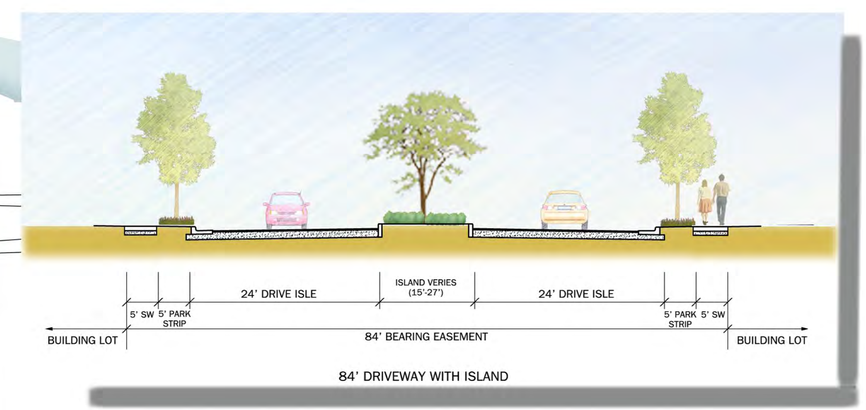

84' DRIVEWAY WITH ISLAND

ATeam Land Consultants
Committed to You!

KELLER WILLIAMS REALTY BOISE

BUILDING CONTRACTORS ASSOCIATION of Southwestern Idaho BCA Member

Merlin Point | Kuna, Idaho

RECORDING REQUESTED BY AND
WHEN RECORDED RETURN TO:

City Clerk
City of Kuna
P.O. Box 13
Kuna, ID 83634

AUGUST 27, 2013

For Recording Purposes
Do Not Write Above This Line

TFI, LP (TOM NICHOLSON) ANNEXATION DEVELOPMENT AGREEMENT

(CAR06-00054)

RECITALS

THIS DEVELOPMENT AGREEMENT ("**Agreement**") is entered into this ___ day of September, 2013, by and between the **City of Kuna**, an Idaho municipal corporation "**City**", and **TFI, LP (Tom Nicholson),** whose address is **PO Box 690, Meridian, Idaho 83680,** as "**Applicant**"**,** the owner of the property described herein: R0615254601 and S1324449005**,** hereafter referred to as "**Developer**".

A. Developer owns certain properties ("**Property**") located in Ada County, particularly, approximately 18.75 acres (R0615254601) and 32.58 acres (S1324449005), two parcels of land located at or near 1380 east Kuna Road, in Kuna, and more particularly described on Exhibit A, attached hereto.

B. The Developer has applied to the City to rezone the above mentioned parcels, in order to enter the City corporate limits with said properties.

C. In particular, Developer has submitted applications (Case No.s **13-01-AN, 13-01-DA and 13-01-S**) to annex the previously listed parcels into the corporate limits of the city of Kuna with a C-1 (Neighborhood Commercial District) zone for both parcels. This Agreement concerns the annexation and zone change of said properties.

D. City and Developer desire to enter into this Agreement, which shall be recorded in the Office of the Ada County Recorder and shall take effect on the date last executed below.

E. City, pursuant to Idaho Code Section 67-6511A and Kuna City Code, Title 5, Chapter 14, has the authority to conditionally rezone the property and to enter into a Development Agreement for the purpose of allowing, by Agreement, annexation of said parcel for a specific purpose or use which is appropriate in the area, and this Agreement contains the conditions required by the City. This Agreement supersedes any conflicting terms and/or conditions in prior agreements or staff reports concerning the land as to obligations between the parties to this Agreement. This Agreement complies with all Kuna Idaho Municipal Code Title 5 zoning regulations and Title 6 subdivision regulations as they are applicable to these land use actions.

F. The Kuna Planning and Zoning Commission and City Council have independently held public hearings on these land use matters as prescribed by law and have approved the application in accordance with the findings of fact, conclusions of law and conditions of approval set forth in its approval, and all such conditions are included in this Agreement. This Agreement is made pursuant to and in accordance with the provisions of Idaho Code Section 67-6511A and Kuna City Code Title 5 and Title 6.

G. The uses(s) allowed through this conditional annexation are those that are permitted or specially permitted, by way of a special use permit, in the C-1 (Neighborhood Commercial District) zone; or those agreed to, provided they are not in conflict with City code. At time of future development, the City and Developer shall amend this agreement to provide and allow for more aggressive development possibilities if necessary.

H. The Councils Order of Decision for the annexation and land use zone classification, including all conditions of approval, is hereby made a part of this Agreement. In the event there is a discrepancy or conflict, the stricter condition shall apply unless specifically stated otherwise in this development agreement.

AGREEMENT

NOW, THEREFORE, in consideration of the mutual promises, covenants, and agreements stated herein, and for other consideration, the sufficiency of which is hereby acknowledged, City and Developer agree as follows:

1. ZONING ORDINANCE AMENDMENT.

1.1: The City will adopt an ordinance amending the Kuna Zoning Ordinance to rezone the Property to C-1 (Neighborhood Commercial District). The Ordinance will become effective after its passage, approval, and publication and the execution and recordation of the Agreement. It is possible this Agreement could be modified to accommodate the Developer's future land use plans as they become known, based on the uses and development plans at that time. The Ordinance will become effective after its passage, approval, publication and the execution and recordation of this Agreement.

2. PERMITTED USES.

2.1: **Development According to the Conceptual Site Plan**. Developer agrees to modify this development agreement through public hearing processes and follow City code at the time of future development. The developer has provided a preliminary plat and landscape plan (both are dated 2.26.2013) and shall be relied upon and considered binding site plans. Substantial (as determined by the Director of planning services) modifications to either plan shall require the approval of the Kuna Planning and Zoning Commission and City Council through public hearing processes. However, minor site plan modifications may be approved administratively. The Director of planning services will determine if a change is of minor significance or necessitates legislative review.

2.2: **Uses**. Generally speaking, the property is approved for the uses typically associated with a C-1 zone.

2.3: **Modification of Allowed Uses**. The uses permitted within this Agreement shall not be modified without complying with the notice and hearing provisions of Idaho Code § 67-6509, provided, however, any specially permitted use(s) in the C-1 may be permitted on the property through issuance of a special use permit.

3. CONDITIONS ON DEVELOPMENT.

The following conditions shall apply to the property in the event of future development, expansion or enlargement, as determined by the Director of planning services:

3.1: **Bicycle Spaces.** Developer shall provide a minimum of 40 bicycle parking spaces evenly spaced within the project.

3.2: **Building Permits.** Developer shall acquire a building permit before construction of the facility. Developer shall comply with the C-1 zone's height and area performance standards found in Kuna City Code (KCC) 5-3-3. Specifically, they shall comply with the following C-1 zone standards:

Maximum Height-	35-feet
Minimum Lot Width	0'*****
Front Setback (Local)	15'
Front Setback (Arterial)	0'
Rear Setback	5'
Interior Setback	0'
Street Side	10'
Maximum Lot Coverage	100% *(if permitted by other applicable obligations pursuant to this Agreement and the Kuna City Code) Design review will be required for all commercial buildings on site.*
Minimum Lot Area	2,000 square feet.

***** The commercial lot width shall be wide enough to accommodate a commercial driveway for the lot frontage accessing the public street where direct driveway access is permitted.

3.3: **Construction Etiquette.** Developer shall post and maintain a "rules and regulation sign" at the entryways to the site until construction is complete. The signs are intended for the subcontractors performing the work and should include: (1) no dogs permitted; (2) no loud music permitted; (3) no alcohol or drugs permitted; (4) no abusive language permitted; (5) dispose of personal trash and site debris; (6) clean up any mud and/or dirt that is deposited from the construction site onto the public street; (7) install temporary construction fence to keep debris from blowing off site; (8) no burning of construction or other debris on the property; (9) keep a watering truck on site and employed as necessary to keep dust under control; (10) Site construction shall be limited to the hours of **7:00** am to **7:00** pm daily.

3.4: **Curbs, Gutters, Sidewalks and Storm-Water Conveyances.** The use of drainage swales for storm water conveyance in lieu of curb and gutter is prohibited unless it's necessary

to preserve a historical drainage right that would be impeded by the swale's removal and such action is determined by the City engineer. There shall be no mixing of irrigation drainage water and road runoff water. All construction shall be in accordance with Idaho Standards for Public Construction Work (ISPCW) or other standards established by the City engineer.

3.5: **Design Review.**

3.5.1: Commercial development proposed on the Property is subject to the City's design review process.

3.5.2: Design review is required for all proposed new commercial building(s), landscaping, parking lots, entrances, monuments, common areas and/or signage uses.

3.5.3: Commercial buildings and their compositions are subject to design review pursuant to requirements in the Kuna City Code relative to usage of materials, woods, entrances, window arrangement and other considerations.

3.5.4: Any materials employed in the construction of fencing, wall and trash enclosures are subject to design review and/or J&M Sanitations review.

3.5.5: Any fencing and/or wall materials employed in the development are subject to design review pursuant to requirements in the Kuna City Code. See KCC 5-4- 1 thru 17.

3.6: **Driveways and other Approaches.**

3.6.1: Developer agrees future commercial areas and entrances to the site are subject to the Design Review Standards pursuant to requirements in the Kuna City Code (KCC) 5-4-2.

3.6.2: All curb returns throughout this development shall be constructed with ***28-feet minimum* curb *return radius.***

3.6.3: Applicant shall remove the proposed RIRO on East Kuna Road (south west part of the site), and the access on the inside of the SH 69 curve. Locations are depicted on the preliminary plat, date stamped 2.26.2013.

3.6.4: Developer shall be allowed full access approaches into the site where East Ensolorado & North Sailer Avenue intersect SH 69 for a total of two access from SH 69. Locations are depicted on the preliminary plat, date stamped 2.26.2013.

3.7: **Engineering Calculations/Drawings/Plans/Reports.**

3.7.1: At the time of construction, developer shall obtain a letter from the City engineer recommending engineering approval of construction drawings, drainage and storm-water plans.

3.7.2: At the time of construction plan submittal, developer shall provide the City engineer with fire flow, water distribution and wastewater calculations and acquire all necessary permits and pay all associated fees. The City engineer will review the water modeling results and provide comments or corrections.

3.7.3: At the time of construction plan submittal, a geotechnical report (if required) is subject to the City engineer's review and corrections.

3.7.4: Developer shall comply with the approved recommendations of the City Engineer as noted in the submitted memorandum dated August 23, 2013.

3.8: **Federal, State, Local and Special Purpose Standards.** Developer shall comply with all applicable federal, state, local and special purpose standards as they apply to the property's development.

3.9: **Fencing.** Developer shall construct and place fencing on site according to the City's zoning standards. Developer shall use the approved type of fencing allowed by City code and obtain a fence permit as outlined in City code.

3.10: **Fire.**

3.10.1: **Hydrants and Water Mains.** Adequate fire protection shall be required in accordance with the appropriate fire district standards. Developer shall meet the requirements of the Kuna Rural Fire District (KFD).

3.10.2: **Fire Safety**. Developer shall address fire safety compliance to the Kuna Fire District and City building inspector's satisfaction. The site landscaping shall be designed and maintained to provide fire protection around the building perimeters. The internal roads shall be designed to allow Kuna Rural Fire District access to each building. Developer will place fire hydrants on the property in locations determined by the Kuna Fire Marshall. Fire related signage shall be installed with guidance from the Kuna Fire Marshall. The water model results are to be reviewed and approved by the KFD.

3.10.3: Developer shall work with the City & KFD to provide an acceptable turn-around for streets longer than 250', which do not have an approved turn-around.

3.11: **Grading Plan**. Developer shall provide a grading plan identifying how the subject property will be graded and contoured. The grading plan shall be reviewed and approved by the City engineer for its compliance with City standards.

3.12: **Irrigation.**

3.12.1: Developer shall comply with Idaho Code §31-3805 relating to irrigation water use. Irrigation/drainage waters shall not be impeded by on-site construction. Developer shall comply with lawful requirements of the Boise Project Board of Control.

3.12.2: At the time of construction plan submittal, developer shall provide the City engineer an irrigation plan for review and approval; if developer uses the City water utility, developer shall acquire all permits and inspections necessary to connect the commercial facility's irrigation system to the City water utility; construct the irrigation system to the City's pressurized irrigation standards; and construct any off-site improvements necessary to connect into the City's water utility.

3.12.3: The use of potable water from the City utility shall not be employed for landscape irrigation purposes.

3.12.4: Submit a petition before final platting to the City consenting to the pooling of irrigation surface water rights for delivery purposes and requesting to annex the irrigation surface water rights appurtenant to the property to the Kuna Municipal Pressure Irrigation system of the City.

3.13: **Land Use Requirements.**

3.13.1: Developer shall comply with the City's land use requirements for commercial zone development or, as modified by this Agreement.

3.13.2: Uses other than those existing at time of annexation, permitted, or specially permitted in the C-1 zone shall not be introduced on the property without further land use review or approvals.

3.13.3: Developer shall meet all requirements set forth in the City's zoning ordinance or, as modified by this agreement.

3.14: **Landscape.**

3.14.1: Site improvements will be subject to the City's landscape ordinance and design review processes depending on scope (note: the design review standards may differ from the City's landscape ordinance). The irrigation plan is subject to City engineer review and approval. An underground irrigation source shall be required for all of the site's landscape elements in accordance with the provisions of **KCC 5-17-11**.

3.14.2: Developer has prepared for City review, a detailed landscape plan. The landscape plan is subject to the City's design review process. The landscape plan shall call out the method(s) of re-vegetating common open space and the periphery areas disturbed during any construction activities. The property's entire landscape scheme shall consist of organic materials. Accordingly, no hard-scape (*or gravel or rock*) materials shall be used for landscape purposes.

3.14.3: Employ vegetative buffers and landscape berming techniques along the property boundaries to minimize adverse land use impacts [compatibility issues] with the adjoining neighbors. The landscape and buffer techniques shall be detailed in a landscape plan.

3.14.4: Developer has submitted a landscape plan to the City forester for review and approval and will be considered a binding plan (date stamped 2.26.2013).

3.14.5: The landscape plan shall follow the landscape requirements and guidelines contained within **KCC 5-17-1 through 25.**

3.14.6: Developer shall place a landscape buffer along SH 69 a minimum width of 30 feet from the property line in accordance with **KCC 5-2A-7-C**.

3.14.7: All required landscaping shall be permanently maintained in a healthy growing condition. The property owner shall remove and replace unhealthy or dead plant material within 3 days or as the planting season permits as required to meet the standards of these requirements. Maintenance and planting within public rights-of-way shall be with approval from the public entities owning the property.

3.15: **Outdoor Lighting.**

3.15.1: On-site lighting shall be designed and installed to minimize fugitive light and glare and installed so it does not unduly intrude on adjoining properties pursuant to requirements in the Kuna City Code.

3.15.2: A lighting plan shall be submitted to the City director of planning services for review and approval in accordance with **KCC 6-4-2-T.**

3.15.3: The site lighting plan shall follow the provisions of **KCC 6-4-2-T, and 5-9-5-B**.

3.16: **Parking and Loading Standards.**

3.16.1: The Property's parking areas shall be installed in accordance with City parking standards **(KCC 5-9-1 through 5).**

3.16.2: Developer shall design and construct the parking area(s) according to approved plans. The parking lot circulation pattern shall be designed so the patrons enter and exit the parking lots in a forward motion consistent with the provisions of **KCC 5-9-2(G).**

3.16.3: Developer shall pave the area allocated for parking purposes with an approved asphalt material. The parking lot construction and methods of storm drainage mitigation are subject to the City engineer's review and approval. Parking spaces shall be designed where the motorist can enter and exit the spaces without obstruction.

3.16.4: Developer shall provide a site plan graphically demonstrating the method of onsite traffic circulation, parking lot placement and loading facility location and satisfy onsite parking space requirements.

3.16.5: The site's traffic circulation pattern and parking placement are subject to the Director of planning services review, consistent with the other provisions of this Agreement.

3.17: **Permits and Applicable Fees.** Developer shall acquire all permits and pay all applicable fees.

3.18: **Plats/Deed.**

3.18.1: In the event of a lot line adjustment, lot split, or subdivision, developer shall provide City a recorded record of survey and deed, or recorded plat for the property changes.

3.18.2: The applicant's preliminary plat (date stamped 2.26.2013) shall be considered binding site plan, or as modified by Council.

3.19: **Sanitary Sewer.**

3.19.1: Developer shall connect the property to the City's sanitary sewer system according to City standards; provide the development's sanitary sewer design to the City engineer for review and approval; acquire all of the permits and inspections necessary to connect to the City's sewer utility; construct the sewer system to City standards and construct offsite improvements necessary to connect to the City's sewer utility.

3.19.2: Developer shall abandon and dismantle any onsite septic tank system and its component parts, according to City and Central District Health standards. The dismantling of a septic system requires collapsing and removing the lid, backfilling and compaction of the fill area.

3.19.3: A sewer study shall be conducted for this site, with consideration to the other TFI, LP properties in the area.

3.20: **Sidewalks and Pathways.**

3.20.1: In accordance with **KCC 6-4-2-Q,** developer shall provide ten-foot (10'), detached concrete sidewalks along the SH 69 Roads frontage. The detached concrete sidewalks shall be a minimum of fifteen-feet (15') from the rights-of-way line. All sidewalks shall be built in accordance with the American with Disabilities Act (**ADA**) accessibility guidelines, as well as to City engineer, ACHD and ITD (Idaho Transportation Department) standards and specifications. The accompanying landscape strip shall have an irrigation system and be reliant upon a non-potable water source. The landscaping elements shall consist solely of organic materials. Developer shall provide a public easement for any sidewalk placed outside public rights-of-way. The placement of the sidewalk outside the public rights-of-way requires City approval. Sidewalks constructed as part of a curb cut installation shall be designed to accommodate the additional loading impacts placed upon it by the weight of the vehicle.

3.20.2: Applicant shall add a trail to at least one side of the Teed Lateral through the site if it is not piped / titled, in conformance with the approved trails map, and City code (KCC 5-17-14).

3.20.2: Developer shall be responsible for snow removal along the sidewalks so they are pedestrian accessible within 24 hours of a snow event.

3.21: **Signage.**

3.21.1: No signs shall be placed on fences, buildings, or other structures unless approved through the City's design review process. Developer shall be in compliance with all signage requirements in place at the time developer seeks a sign permit. See KCC 5-10-1 thru 8.

3.21.2: All site signage and monument placement is subject to the City's design review process to include building identification signage. If site signage or monuments are lighted, they must be designed according to the City's outdoor lighting standards.

3.21.3: Temporary signage placed on the Property's fences, buildings, or other structures for advertising or promotion purposes shall be according to the City's signage placement provisions.

3.22: **Site Plans.** At the time developer applies for a building permit, developer shall provide an overall site/landscape plan, which shall be considered a binding site plan for purposes of the land use application.

3.23: **Storm-water and Drainage.**

3.23.1: The property is subject to the City's storm-water and drainage standards at time of development. Stormwater impacts resultant from the development shall be mitigated in accordance with the City's storm water management policy. The engineer of record shall provide storm-water calculations, which comply with the City's storm-water policy requirements. The discharge of storm-water or drainage offsite requires written approval from the City and other agencies responsible for receiving the fugitive storm-waters.

3.23.2: Developer shall provide the City engineer with a storm-water management plan and a drainage design plan showing how drainage flows from impervious surfaces will be addressed in compliance with the City's drainage management guidelines. The drainage design plan shall also provide an erosion control plan for a 100-year event and shall depict all proposed site grading.

3.23.3: The City engineer shall approve a surface drainage run-off plan, which has been recommended by Central District Health Department (CDHD). The plan should be designed and constructed in conformance with standards contained in "Catalog for Best Management Practices for Idaho Cities and Counties".

3.23.4: Developer shall not construct, grade, fill, clear or excavate the Property until the City engineer approves the storm water management plan and the drainage design plan. The drainage design plan shall include all proposed site grading.

3.23.5: Storm drainage and/or street runoff must be retained onsite.

3.23.6: Design the surface drainage system to minimize "ponding" issues to reduce mosquito breeding problems.

3.24: **Street and Alleys.**

3.24.1: All streets, driveways and alleys shall be constructed in accordance with the standards and specifications adopted by the City, ACHD and ITD. Street functionality shall be determined according to the City's Functional Classified Road Map. Widths for rights-of-way shall be according to the street typologies identified in **KCC 6-3-4-A through D,** or ACHD's standards, which ever standard is more stringent.

3.24.2: Developer shall enter into a license agreement with the transportation authority for landscape maintenance within the public rights-of-way, where applicable.

3.24.3: The following streets need rights-of-way to be dedicated at 51'; East Ontem, East Folgado, East Jackpot and North Olivine.

3.24.4: The following streets need rights-of-way to be dedicated at 61'; East Ensolorado, North Sailer and North Merlin Avenue.

3.24.5: Developer shall comply with City, ACHD and ITD road improvement requirements, the stricter standard shall apply.

3.24.6: Developer shall provide additional rights-of-way and/or easements necessary for utility and road widening purposes as required by the City and other agencies with jurisdiction. Developer shall record these easements with the Ada County Recorder's Office.

3.25: **Street Name and Other Street Traffic Signs.** Traffic signage shall be constructed and installed at appropriate street locations in accordance with City, ACHD and ITD standards as applicable.

3.26: **Trash Enclosures/Solid Waste.** The site's solid waste disposal strategy is subject to design review. Developer shall provide an enclosed or a sight obscuring structure(s) for all trash collection containers. The design shall be approved by the City and J&M Sanitation services.

3.27: **Trees.**

3.27.1: Developer shall retain mature trees with diameters exceeding six-inches (6") (if any exist), unless their removal is approved by City staff prior to their removal.

3.27.2: Developer shall provide a tree replacement strategy to compensate for tree removal, which provides no net tree loss (in terms of overall tree diameter reductions). Developer's tree removal and replanting strategy is subject to the City arborist and Design Review Committee's approval. Developer shall show the tree planting strategy and method of planting on the landscape plan(s) and provide for a year-round variety of trees that are compatible with the area.

3.28: **Underground Storage Tanks, Utilities, Wells or Septic Systems.**

3.28.1: Developer shall disconnect any onsite well(s) and septic systems and cap or remove them according to City and Health District standards.

3.28.2: If discontinued or impaired underground storage tanks are discovered during construction, they shall be removed or abandoned in accordance with federal, state and local agency requirements.

3.29: **Underground Utilities.**

3.29.1: Installation of service facilities shall comply with the requirements of the public utility or irrigation district providing the services.

3.29.2: All public utilities shall be placed underground if possible, see **KCC 6-4-2-W**. A utility easement of sufficient width as determined by the City engineer shall be placed around the exterior subdivision boundary for utility and drainage easement purpose. Utilities that cannot be placed underground are subject to the City's design review process.

3.30: **Water.**

3.30.1: Developer shall connect the property to the City's water system at time of development. Developer shall provide the development's potable water design to the City engineer for review and possible corrections. Developer shall acquire all permits and inspections necessary to connect into the City's water utility.

3.30.2: The water lines, meter locations and waterline valves shall be reviewed by the City public works staff and constructed and placed according to City standards. Water lines are to be looped through the property. Developer is responsible for constructing any off-site improvements necessary to connect into the City's water utility.

3.31: **Water Rights.** Water rights appurtenant to a tract of land shall be dedicated to the City in sufficient water quantities to offset the development's potential water demands as determined by the City engineer. The land's water rights shall not be sold, abandoned or transferred outside the City or Area of City Impact (ACI). All water rights must be transferred to Kuna City through the adoption of a water rights annexation ordinance.

3.31.2: It shall be the responsibility of the developer to secure irrigation water rights prior to the KMID allowing you to connect to the PI system.

3.32: **Weeds**. Developer assumes responsibility for the control and removal of noxious weeds if present on the property until the development of the site is complete.

3.33: **Miscellaneous.**

3.33.1: Applicant shall follow the Highway Overlay District standards within Kuna City Code (KCC 5-2A-1).

3.34.1.1: A frontage road shall be placed at least 660' from the centerline of SH 69, in accordance with KCC5- 2A-5-E. This requires the proposed North Merlin Avenue to be moved westward.

3.34.1.2: This requires a thirty-foot (30') commercial landscape buffer and a ten-foot (10') sidewalk adjacent the SH 69 frontage, among other requirements listed in KCC 5-2A – 1 thru 8.

3.33.2: Applicant shall follow the zoning (KCC Title 5) and subdivision (KCC Title 6) regulations as listed in City code.

3.33.3: Land owner/developer, and any future assigns having an interest in the subject property, shall fully comply with all conditions of development as approved by the City Council, or seek amending them through public hearing processes.

3.33.4: Applicant shall indicate their intentions for either, piping and/or re-routing and using the Teed Lateral as an amenity, and show the new location of the lateral if being re-routed.

3.33.5: Developer shall comply with all current local State and Federal laws.

4. DEFAULT, REMEDIES.

4.1: **Default**. If Developer fails to comply with the terms of this Agreement within forty-five (45) days after written notice from the other party specifying the particulars of such failure, the complaining party may, without prejudice to any other rights or remedies, cure such default, enjoin such violation or otherwise enforce the commitments contained in this Agreement in any manner allowed by law; provided, however, if any failure to comply cannot with diligence be cured within such forty-five (45) day period, if the defaulting party shall commence to cure the same within such forty-five (45) day period and thereafter shall pursue the curing of same with diligence and continuity, then the time allowed to cure such failure may be extended for a period not to exceed 180 days.

4.2: **Consent to Rezone on Uncured Default**. In addition to other remedies set forth herein, if Developer fails to cure any material default within 120 days after written notice from City specifying the particulars of such material default, such failure shall be deemed consent to City to rezone the use to a suitable zone as determined by the City Council, pursuant to the requirements of applicable law.

4.3: **Waiver; Forbearance**. A waiver or forbearance by one party of any default by the other party of any one or more of the covenants or conditions hereof shall apply solely to the breach and breaches waived and shall not bar any other rights or remedies of the party or apply to any subsequent breach of other or future covenants and conditions.

5. ATTORNEY FEES.

5.1: In the event of any controversy, claim or legal action being filed or instituted between the parties to this Agreement to enforce the terms and conditions of this Agreement or arising from the breach of any provision hereof, the prevailing party will be entitled to receive from the other party reasonable attorney fees, expenses, and costs incurred by the prevailing party, including fees and costs on any appeal. This provision shall be deemed to be a separate contract between the parties and shall survive any default, termination or forfeiture of this Agreement.

6. RECORDATION, EFFECTIVE DATE, AND BINDING EFFECT.

6.1: **Recordation**. After approval and execution by City through its authorized agents, developer shall record this Agreement, including all exhibits, against the Property in the real property records of Ada County, Idaho and provide City with a recorded copy of this Agreement.

6.2: **Effective Date**. This Agreement shall become effective upon the formal adoption and final publication of the zoning.

6.3: **Binding Effect; Assignment**. This Agreement shall be binding upon and inure to the benefit of the parties' respective heirs, successors, assigns and personal representatives, including the City's governing authority and their successors in office. This Agreement shall run with the land and be binding on the owner of the Property, each subsequent owner and each other person acquiring an interest in the Property. Nothing herein shall in any way prevent sale or alienation of the Property, except that any sale or alienation shall be subject to the provisions hereof and any successor owner or owners shall be both benefited and bound by the conditions and restrictions herein expressed.

6.4: **Recordation of Termination**. Upon developer's completion of all of its obligations under this Agreement, City shall provide developer, upon request, recordable evidence of City's concurrence that Developer's obligations under this Agreement have been completed.

7. GENERAL PROVISIONS.

7.1: **Incorporation of Recitals.** The recitals above and the exhibits referenced in this Agreement and attached hereto are incorporated into the Agreement as if set out in full in the body of the Agreement. In the event of a conflict between any exhibit and the body of this Agreement, the Agreement shall control unless otherwise noted.

7.2: **Amendments.** Any alteration or change to this Agreement shall be made only after complying with the notice and hearing provision of Idaho Code Section §67-6509, as required by Kuna City Code, Title 5, Chapter 14.

7.2.1 It is anticipated this Agreement will be amended for time to time to accommodate the Developers development pursuits.

7.3: **Interpretation**. In construing this Agreement, feminine or neuter pronouns shall be substituted for those masculine in form and vice versa, plural terms shall be substituted for singular and singular for plural in any place in which the context so requires, and the word "including" shall be construed as if the words "but not limited to" appear immediately thereafter. The headings contained in this Agreement are for reference purposes only and shall not be construed or interpreted so as to limit or define the intent or the scope of any part of this Agreement. This Agreement shall not be construed more strictly against one party than against another merely by virtue of the fact that it may have been prepared by one of the parties, it being acknowledged that both parties have substantially and materially contributed to the preparation thereof. This Agreement and all rights and obligations of the parties shall be governed, construed, and interpreted under and pursuant to the laws of the state of Idaho.

7.4: **Final Agreement; Modifications**. This Agreement sets forth all promises, inducements, agreements, conditions and understandings between developer and City relative to the subject matter hereof and there are no promises, agreements, conditions or understanding, oral or written, express or implied, between developer and City, other than as are stated herein. This Agreement contains all conditions required by the City and supersedes conditions specified in City staff reports and any conflicting terms and conditions in prior development agreements concerning the land as to obligations between the parties to this Agreement. Except as herein otherwise provided, no subsequent alteration, amendment, changes or additions to this Agreement shall be binding upon the parties hereto unless reduced to writing and signed by them or their successors in interest or their assigns, and pursuant, with respect to City, to a duly adopted ordinance or resolution of City.

7.5: **Notices**. All notice between the parties shall be deemed received when personally delivered or when deposited in the United States mail postage prepaid, registered or certified, with return receipt requested, or sent by telegram or mail-o-gram or by recognized courier delivery (e.g., Federal Express, Airborne, Burlington), addressed to the parties, as the case may be, at the address set forth below or at such other addresses as the parties may subsequently designate by written notice given in the manner provided in this Section:

To City: City of Kuna
Greg Nelson, Mayor
P.O. Box 13
Kuna, ID 83634

To Applicant / Developer: Thomas Nicholson, TFI, LP
P.O. Box 690
Meridian, Idaho 83680

Either party shall give notice to the other party of any change of such party's address for the purpose of this section by giving written notice of such change to the other party in the manner herein provided.

7.5: **Time of the Essence**. The parties hereto acknowledge and agree that time is strictly of the essence with respect to each and every term, condition and provision hereof, and that the failure to timely perform any of the obligations hereunder shall constitute a breach of and a default under this Agreement by the party so failing to perform.

7.6: **Severability**. If any term or provision of this Agreement shall, to any extent be determined by a court of competent jurisdiction to be invalid or unenforceable, the remainder of this Agreement shall not be affected thereby, and each term and provision of this Agreement shall be valid and be enforceable to the fullest extent permitted by law; and it is the intention of the parties hereto that if any provision of this Agreement is capable of two constructions, one of which would render the provision void and the other of which would render the provision valid, the provision shall have the meaning which renders it valid.

[end of text; signatures to follow]

The parties have executed this Agreement as of the date first set forth above.

"**City**" CITY OF KUNA, an Idaho municipal corporation

By:_____

Date:_____

ATTEST:

_____

City Clerk

Date:_____

"**Applicant / Developer**" Thomas Nicholson, TFI LP

By:_____

Date:_____

State of Idaho)
: ss
County of Ada)

Subscribed and sworn to (or affirmed) before me this _____ day of _____, 2013.

And who personally appeared before me

_____

(SEAL) Notary Public:_____

My Commission Expires on:_____

State of Idaho)
: ss
County of Ada)

Subscribed and sworn to (or affirmed) before me this _____ day of _____, 2013.

And who personally appeared before me

_____

(SEAL) Notary Public:_____

My Commission Expires on:_____

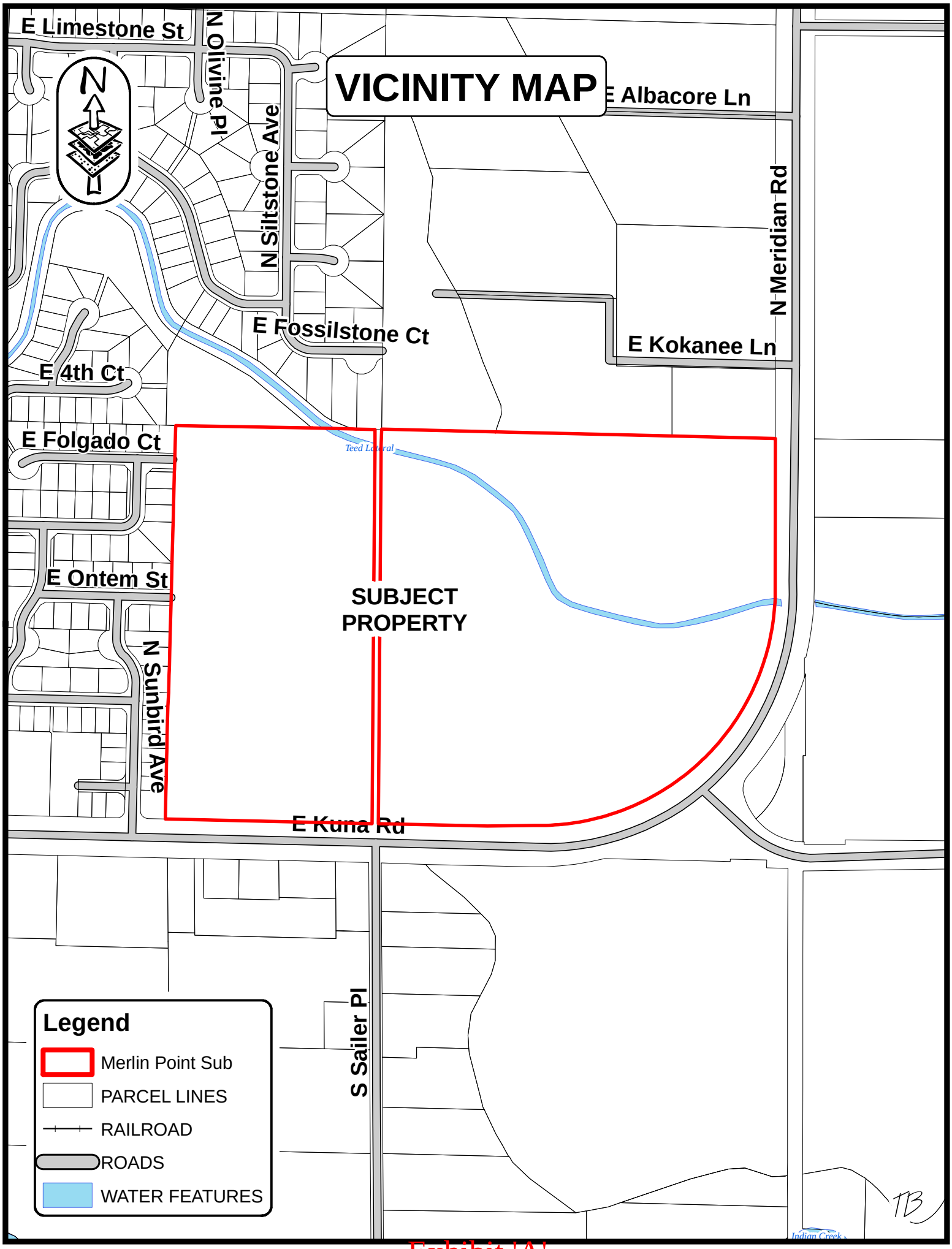
VICINITY MAP
E Limestone St
N Olivine Pl
N Siltstone Ave
E Albacore Ln
N Meridian Rd
E Fossilstone Ct
E Kokanee Ln
E 4th Ct
E Folgado Ct
Teed Lateral
E Ontem St
SUBJECT PROPERTY
N Sunbird Ave
E Kuna Rd
S Sailer Pl
Indian Creek
Legend
Merlin Point Sub
PARCEL LINES
RAILROAD
ROADS
WATER FEATURES

Exhibit 'A'

Legal Description
Merlin Pointe Subdivision – NW Property

A parcel located in the SE ¼ of Section 24 of Township 2 North, Range 1 West, Boise Meridian, Ada County, Idaho, and more particularly described as follows:

Commencing at a Brass Cap monument marking the southeast corner of said SE ¼, from which a Brass Cap monument marking the southwest corner of said SE ¼ bears N 88°38'59" W a distance of 2667.49 feet;

Thence N 0°04'29" E along the easterly boundary of said SE ¼ a distance of 1320.17 feet to a point marking the northeast corner of the SE ¼ of the SE ¼ of said Section 24;

Thence N 88°40'00" W along the northerly boundary of said SE ¼ of the SE ¼ a distance of 65.01 feet to a 5/8 inch diameter iron pin on the westerly right-of-way of S. Meridian Road and the **POINT OF BEGINNING;**

Thence S 0°04'29" W along said westerly right-of-way a distance of 484.59 feet to a 5/8 inch diameter iron pin;

Thence continuing along said westerly right-of-way a distance of 1200.47 feet along the arc of a 753.51 foot radius curve right, said curve having a central angle of 91°16'56" and a long chord bearing S 45°42'39" W a distance of 1077.48 feet to a 5/8 inch diameter iron pin on the northerly right-of-way of E. Kuna Road;

Thence S 89°25'45" W along said northerly right-of-way a distance of 149.15 feet to a 5/8 inch diameter iron pin;

Thence continuing along said northerly right-of-way N 88°38'59" W a distance of 348.53 feet to a 5/8 inch diameter iron pin;

Thence leaving said northerly right-of-way N 0°34'36" E a distance of 1259.56 feet to a 5/8 inch diameter iron pin on the northerly boundary of the S ½ of the SE ¼ of said Section 24;

Thence N 88°40'00" W along said northerly boundary a distance of 20.00 feet to a 5/8 inch diameter iron pin;

Thence leaving said northerly boundary S 0°34'36" W a distance of 1259.56 feet to a 5/8 inch diameter iron pin on the northerly right-of-way of E. Kuna Road;

Thence N 88°38'59" W along said northerly right-of-way a distance of 660.53 feet to a Brass Cap monument on the westerly boundary of Block 15 of the Amended Plat of Part of the Avalon Orchard Tracts as shown in Book 6 of Plats on Page 254, records of Ada County, Idaho;

Thence N 1°17'30" E along said westerly boundary a distance of 1259.25 feet to a 5/8 inch diameter iron pin on the northerly boundary of said S ½ of the SE ¼;

Thence S 88°40'00" E along said northerly boundary a distance of 1921.98 feet to the **POINT OF BEGINNING;**

Exhibit 'B'

This parcel contains 52.34 acres and is subject to any easements existing or in use.

Clinton W. Hansen, PLS
Land Solutions, PC
January 2, 2013

PROFESSIONAL LAND SURVEYOR
REGISTERED
11118
1/02/13
STATE OF IDAHO
CLINTON W. HANSEN

Exhibit 'B'

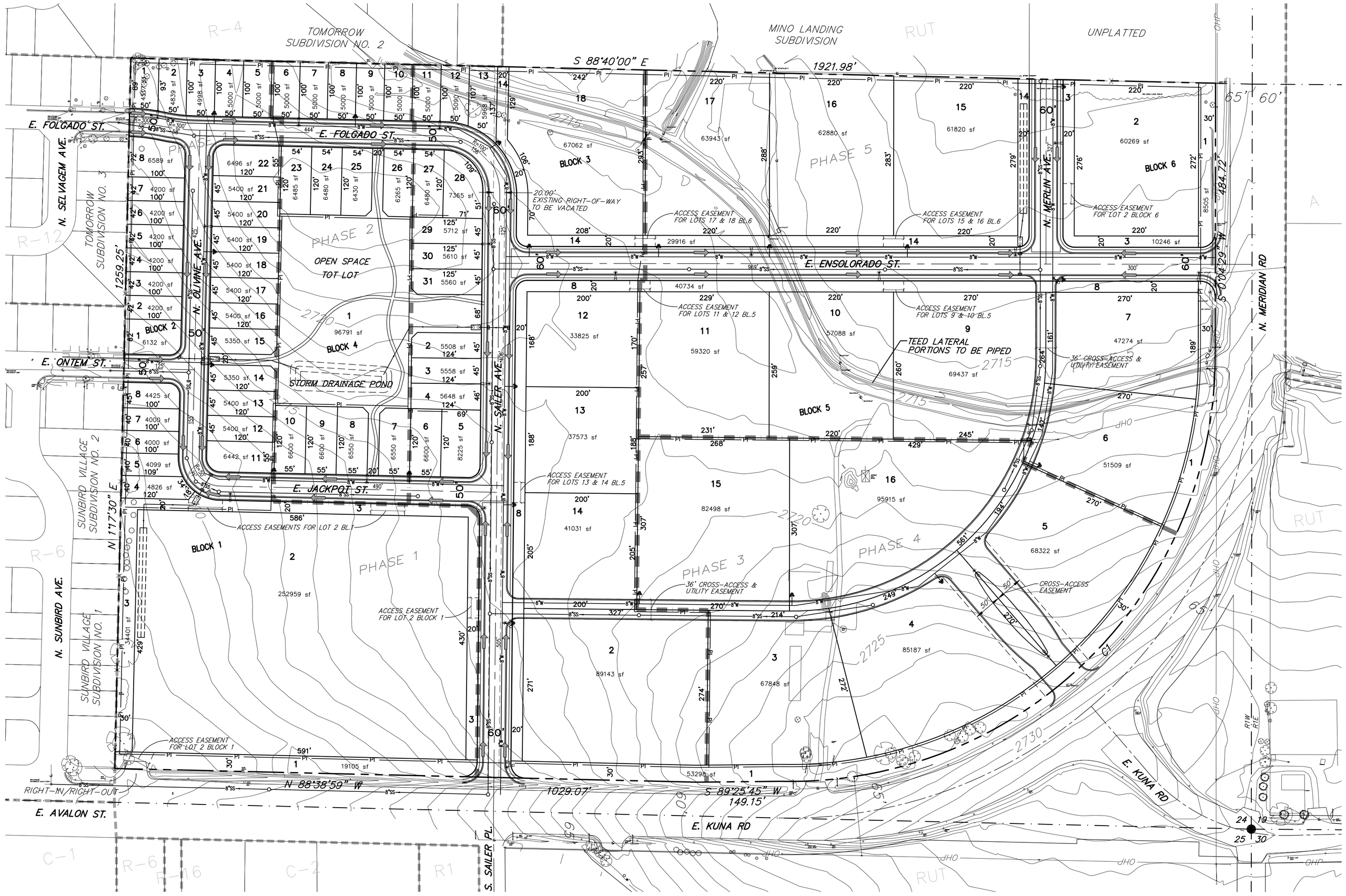

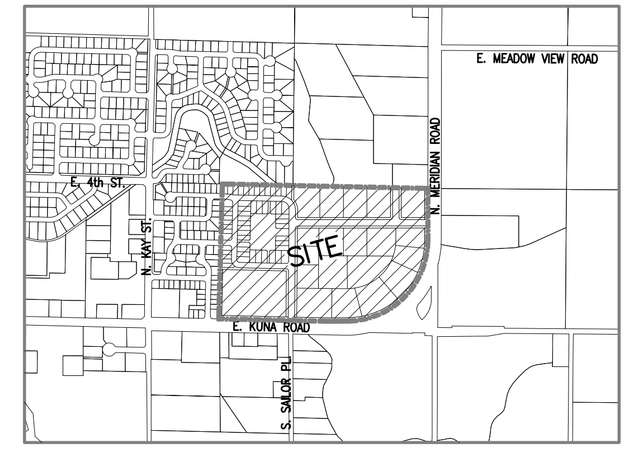

VICINITY MAP
N.T.S.

SCALE 1" = 100'

NOTES

1. KUNA CITY WATER AND SEWER SERVICE SHALL BE EXTENDED TO ALL LOTS.
2. SUBJECT PROPERTY DOES NOT FALL WITHIN ANY FEMA FLOOD HAZARD ZONE–REFERENCE FIRM PANEL 16001C0250J, DATED OCT. 2, 2003.
3. ALL LOT SHALL HAVE A PERMANENT EASEMENT FOR PUBLIC UTILITIES, STREET LIGHTS, IRRIGATION AND LOT DRAINAGE OVER THE 10 (TEN) FEET ADJACENT TO ANY PUBLIC STREET. EXCEPT FOR LOTS 4–8, BLOCK 1; LOTS 1–8, BLOCK 2; LOTS 1–13, BLOCK 3; AND LOTS 2–31, BLOCK 4, OR AS OTHERWISE SHOWN, THERE SHALL BE A 5 (FIVE) FOOT PUBLIC UTILTY, IRRIGATION AND LOT DRAINAGE EASEMENT ADJACENT TO ANY LOT LINE NOT ADJACENT TO A PUBLIC STREET.
4. MINIMUM BUILDING SETBACK LINES SHALL BE IN ACCORDANCE WITH THE APPLICABLE STANDARDS OF THE CITY OF KUNA AT THE TIME OF ISSUANCE OF THE BUILDING PERMIT.
5. THE DEVELOPER SHALL PROVIDE PRESSURIZED IRRIGATION WATER TO EACH LOT. ANNEXATION OF SURFACE WATER RIGHTS INTO THE KMID WILL BE REQUESTED.
6. STORM DRAINAGE SHALL BE RETAINED ON SITE THROUGH SURFACE AND SUBSURFACE FACILITES AS APPROVED BY ACHD.
7. LOTS 1 & 3, BLOCK 1; LOT 14, BLOCK 3; LOT 1, BLOCK 4; LOTS 1 & 8, BLOCK 5; AND LOTS 1 & 3, BLOCK 6 ARE COMMON LOTS TO BE OWNED AND MAINTAINED BY THE MERLIN LOT OWNERS ASSOCIATION OR ITS ASSIGNS.

PRELIMINARY DEVELOPMENT FEATURES

TOTAL ACRES	52.92 ACRES
TOTAL LOTS	84
COMMON/OPEN SPACE LOTS	8
COMMERCIAL LOTS	20
RESIDENTIAL LOTS	56
RESIDENTIAL AREA	11.46 ACRES
RESIDENTIAL DENSITY	4.9 UNITS/Ac.
CURRENT ZONING	RUT
PROPOSED ZONING	C–1
OPEN SPACE LOTS:	
INTERIOR LANDSCAPE BUFFER AREA:	2.42 ACRES
ARTERIAL LANDSCAPE BUFFER AREA:	1.86 ACRES
PARK/TOT LOT:	2.22 ACRES
STREET CENTERLINE	4,444 L.F.

DEVELOPER / OWNER
TFI LP
P.O. BOX 690
MERIDIAN, ID 83680

SURVEYOR
LAND SOLUTIONS
231 E. 5th ST.
MERIDIAN, ID 83642
(208) 288-2040

PLANNER / CONTACT
STEVE ARNOLD
A-TEAM LAND CONSULTANTS
1785 WHISPER COVE AVE.
BOISE, ID 83709
208-871-7020

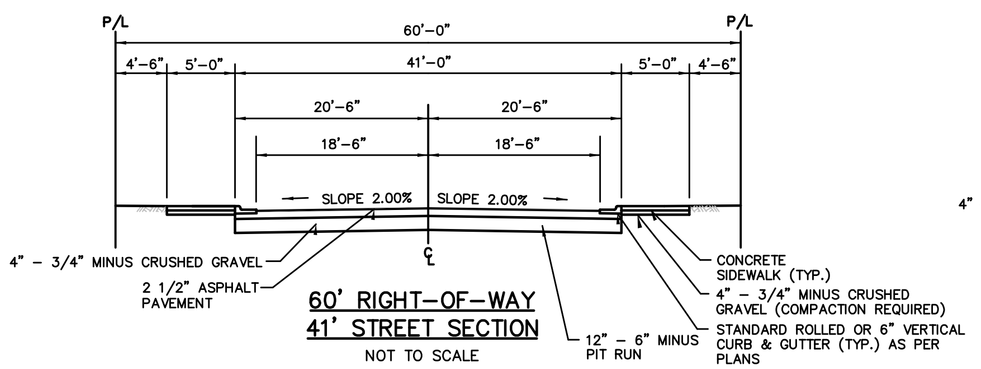

60' RIGHT-OF-WAY
41' STREET SECTION
NOT TO SCALE

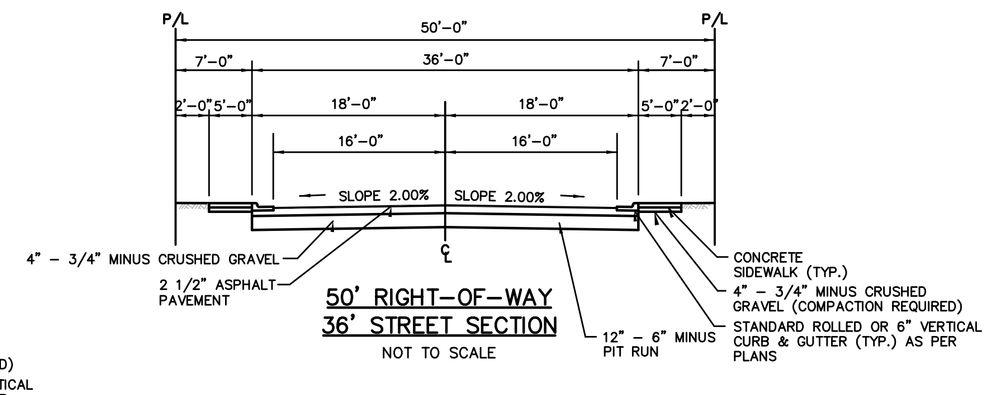

50' RIGHT-OF-WAY
36' STREET SECTION
NOT TO SCALE

LEGEND

BOUNDARY
PHASE LINE
RIGHT-OF-WAY LINE
LOT LINE
CENTER OF ROAD
SANITARY SEWER W/MANHOLE
WATER
PRESSURE IRRIGATION
CURB & GUTTER
SIDEWALK
EASEMENT LINE
5' CONTOUR
1' CONTOUR
EXISTING SANITARY SEWER
EXISTING WATER
EXISTING IRRIGATION
EXISTING CURB & SIDEWALK
ZONING BOUNDARY
LOT NUMBER
CATCH BASIN & STORM DRAIN LINE
SAND & GREASE TRAP
SEEPAGE BED
DRAINAGE FLOW
FIRE HYDRANT
STREET LIGHT

CURVE DATA

CURVE	LENGTH	RADIUS	DELTA	CHORD	BEARING
C1	1200.47'	753.51'	91°16'56"	1077.48'	N 45°42'39" E

MERLIN SUBDIVISION

PRELIMINARY PLAT
SECTION 24, T.2N., R.1W., B.M.
CITY OF KUNA, ADA COUNTY, IDAHO

A Team Land Consultants
Committed to You!

SHEET 1 OF 1

DRAWN BY: BKB
DATE: 02/26/13
FILE: MERLIN PRE.DWG

Exhibit 'C'

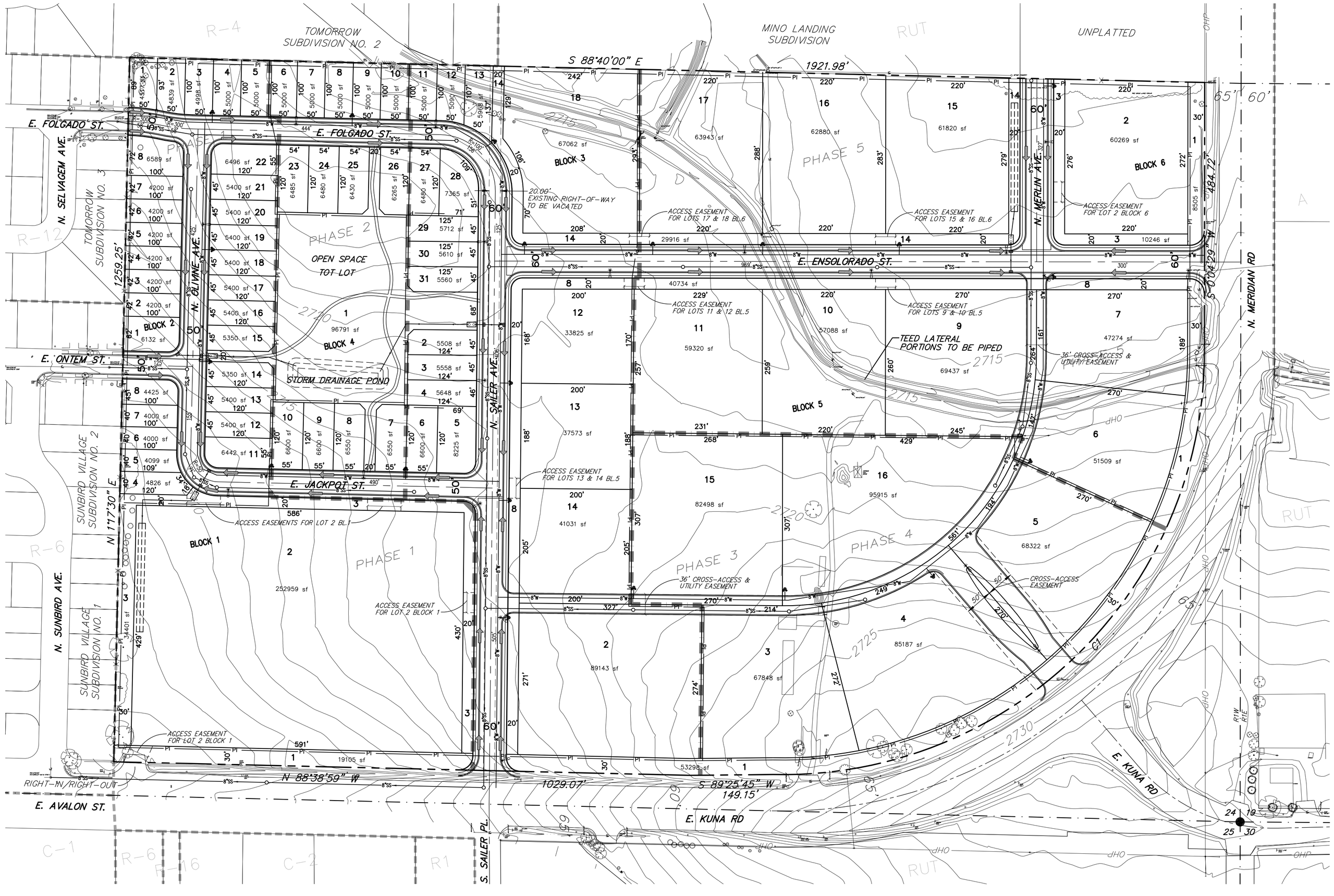

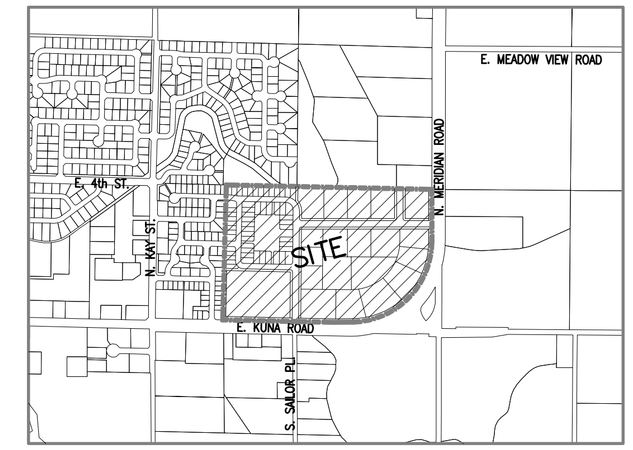

VICINITY MAP
N.T.S.

N
W E
S

0 100' 200'
SCALE 1" = 100'

NOTES

1. KUNA CITY WATER AND SEWER SERVICE SHALL BE EXTENDED TO ALL LOTS.
2. SUBJECT PROPERTY DOES NOT FALL WITHIN ANY FEMA FLOOD HAZARD ZONE–REFERENCE FIRM PANEL 16001C0250J, DATED OCT. 2, 2003.
3. ALL LOT SHALL HAVE A PERMANENT EASEMENT FOR PUBLIC UTILITIES, STREET LIGHTS, IRRIGATION AND LOT DRAINAGE OVER THE 10 (TEN) FEET ADJACENT TO ANY PUBLIC STREET. EXCEPT FOR LOTS 4–8, BLOCK 1; LOTS 1–8, BLOCK 2; LOTS 1–13, BLOCK 3; AND LOTS 2–31, BLOCK 4, OR AS OTHERWISE SHOWN, THERE SHALL BE A 5 (FIVE) FOOT PUBLIC UTILTY, IRRIGATION AND LOT DRAINAGE EASEMENT ADJACENT TO ANY LOT LINE NOT ADJACENT TO A PUBLIC STREET.
4. MINIMUM BUILDING SETBACK LINES SHALL BE IN ACCORDANCE WITH THE APPLICABLE STANDARDS OF THE CITY OF KUNA AT THE TIME OF ISSUANCE OF THE BUILDING PERMIT.
5. THE DEVELOPER SHALL PROVIDE PRESSURIZED IRRIGATION WATER TO EACH LOT. ANNEXATION OF SURFACE WATER RIGHTS INTO THE KMID WILL BE REQUESTED.
6. STORM DRAINAGE SHALL BE RETAINED ON SITE THROUGH SURFACE AND SUBSURFACE FACILITES AS APPROVED BY ACHD.
7. LOTS 1 & 3, BLOCK 1; LOT 14, BLOCK 3; LOT 1, BLOCK 4; LOTS 1 & 8, BLOCK 5; AND LOTS 1 & 3, BLOCK 6 ARE COMMON LOTS TO BE OWNED AND MAINTAINED BY THE MERLIN LOT OWNERS ASSOCIATION OR ITS ASSIGNS.

PRELIMINARY DEVELOPMENT FEATURES

TOTAL ACRES	52.92 ACRES
TOTAL LOTS	84
COMMON/OPEN SPACE LOTS	8
COMMERCIAL LOTS	20
RESIDENTIAL LOTS	56
RESIDENTIAL AREA	11.46 ACRES
RESIDENTIAL DENSITY	4.9 UNITS/Ac.
CURRENT ZONING	RUT
PROPOSED ZONING	C–1
OPEN SPACE LOTS:	
INTERIOR LANDSCAPE BUFFER AREA:	2.42 ACRES
ARTERIAL LANDSCAPE BUFFER AREA:	1.86 ACRES
PARK/TOT LOT:	2.22 ACRES
STREET CENTERLINE	4,444 L.F.

DEVELOPER / OWNER
TFI LP
P.O. BOX 690
MERIDIAN, ID 83680

SURVEYOR
LAND SOLUTIONS
231 E. 5th ST.
MERIDIAN, ID 83642
(208) 288-2040

PLANNER / CONTACT
STEVE ARNOLD
A-TEAM LAND CONSULTANTS
1785 WHISPER COVE AVE.
BOISE, ID 83709
208-871-7020

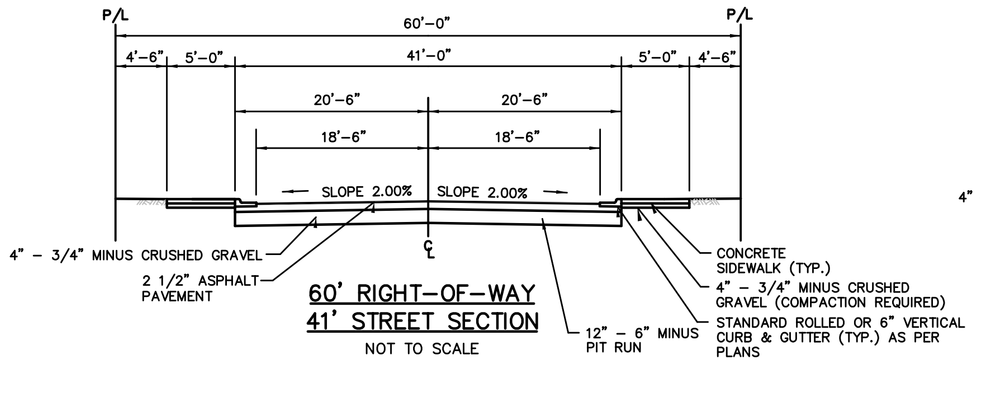

60' RIGHT–OF–WAY
41' STREET SECTION
NOT TO SCALE

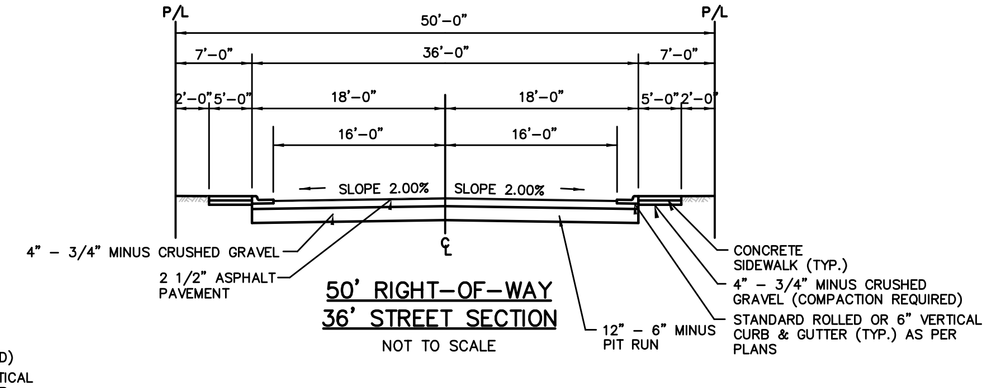

50' RIGHT–OF–WAY
36' STREET SECTION
NOT TO SCALE

LEGEND

BOUNDARY
PHASE LINE
RIGHT–OF–WAY LINE
LOT LINE
CENTER OF ROAD
SANITARY SEWER W/MANHOLE
WATER
PRESSURE IRRIGATION
CURB & GUTTER
SIDEWALK
EASEMENT LINE
5' CONTOUR
1' CONTOUR
EXISTING SANITARY SEWER
EXISTING WATER
EXISTING IRRIGATION
EXISTING CURB & SIDEWALK
ZONING BOUNDARY
LOT NUMBER
CATCH BASIN & STORM DRAIN LINE
SAND & GREASE TRAP
SEEPAGE BED
DRAINAGE FLOW
FIRE HYDRANT
STREET LIGHT

CURVE DATA

CURVE	LENGTH	RADIUS	DELTA	CHORD	BEARING
C1	1200.47'	753.51'	91°16'56"	1077.48'	N 45°42'39" E

MERLIN SUBDIVISION

PRELIMINARY PLAT
SECTION 24, T.2N., R.1W., B.M.
CITY OF KUNA, ADA COUNTY, IDAHO

A Team Land Consultants
Committed to You!

SHEET 1 OF 1

DRAWN BY: BKB
DATE: 02/26/13
FILE: MERLIN PRE.DWG

Exhibit 'D'

Vicinity Map

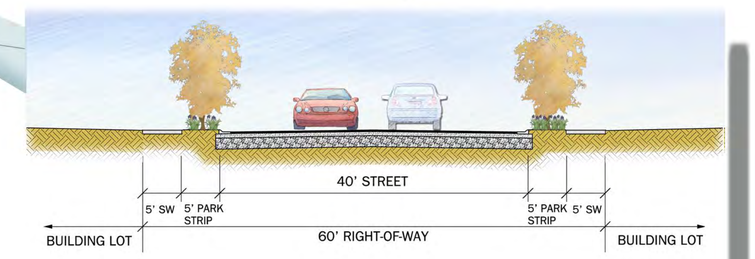

TYPICAL STREET SECTION
60' RIGHT-OF-WAY

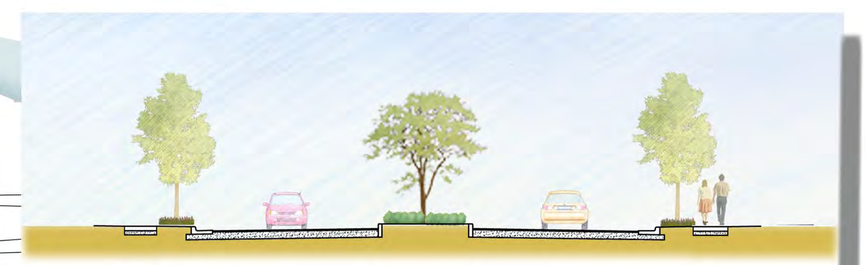

84' DRIVEWAY WITH ISLAND

ATeam Land Consultants
Committed to You!

KELLER WILLIAMS REALTY BOISE

BUILDING CONTRACTORS ASSOCIATION of Southwestern Idaho BCA Member

Merlin Point | Kuna, Idaho

Exhibit 'E'

LAND USE TABLES

Land Uses	Districts														
	A	R-2	R-4	R-6	R-8	R-12	R-20	O	C-1	C-2	C-3	CBD	M-1	M-2	P
AGRICULTURE															
Agriculture, General $_{1\text{-}26}$	P	P											S	S	P
Agri-tainment $_{15}$	P	P													S
Beekeeping (Hives)	P	P													
Berry and Bush Crop/ Vineyard	P	P											P		S
Community/Urban Garden $_{1\text{-}7\text{-}15}$	P	P	P	P	P	P	P	P	P	P	P	P	P		P
Feed Store $_{15\text{-}26}$	S								P	P	P	S	P		
Feedlot or Dairy $_{26}$	S														
Fish Farm $_{15}$	S												S		S
Flower Gardening	P	P	P	P	P	P	P	P	P	P	P	P	P	P	P
Gardening (for home consumption - on-site) $_{1}$	P	P	P	P	P	P	P	P	P	P	P	P	P		P
Grazing/Raising Domestic Farm Animals $_{2}$	P	S													
Livestock Sales $_{15}$	S	S													
Orchards, Tree Crops	P	P	P	P									P		S
Plant Nursery $_{15}$	P	P							S	S			P		S
Plant or Tree Farm	P	P											P		S
Poultry, Fowl, Rabbits		P	P_4	P_4									P		
Riding Arenas/Stables/ Schools $_{15\text{-}26}$	P	S													
Roadside Stands, Seasonal $_{3\text{-}15}$	P	S							P	P	P	S			S

Agriculture notes:

- The city has discontinued the R-1, R-3, and R-5 zones and converted these discontinued zones to the following: R-1 see R-2; R-3 see R-4; and R-5 see R-6. The M-3 zone, which is limited to mining uses, has been consolidated with the M-2 zone.
- The Office "O" and Residential R-20 zones require direct access to a collector or arterial roadway.
- Footnotes are found on pages following these land use tables. (Ord. No. 2011-07, § 1, 12-20-2011; Ord. No. 2012-18, § 1, 11-6-2012)

Exhibit 'F'

Land Uses	Districts														
	A	R-2	R-4	R-6	R-8	R-12	R-20	O	C-1	C-2	C-3	CBD	M-1	M-2	P
RESIDENTIAL															
Accessory Use [7-26]	P	P	P	P	P	P	P	P	P	P	P	P	P	P	P
Accessory Dwelling Unit (aka mother in-law quarters/Carriage House) [52]		P	P	P	S										
Bed and Breakfast [15]		S	S	S	S				S			S			
Dwelling, single-family [5]		P	P	P	P	P	P		P [6]			P [6]			
Dwelling, duplex [5]		S	P	P	P	P	P								
Dwelling, Condominium/Town-house/Garden Apartment [5-7-15-53]				S [7]	P [7]	P [7]	P [7]		P [7]			P [7]			
Dwelling, multifamily/Apartments (3 or more units under one roof) [5-15-53]		S [7]	S [7]	S [7]	P [7]	P [7]	P [7]		P [7]						
Home Occupation [26-28]		P	P	P	P							S			
Living Facilities/Group Living:															
• Assisted Living [7-15-53]		S	S	S	S	S	S		S						
• Boarding/Rooming House [7-15-53]					S	S	S		P [6]			P [6]			
• Caretaker [13]	P								S			S	S		
• Fraternity/Sorority/Dormitory/ Res. Hall [5-7-9-15-53]						S	S		S	S		S			S
• Group Home [5-7-15-53]					S	S	S		S						
• Halfway House [5-7-15-53]						S			S						S
• Nursing Home [5-7-15-53]		S	S	S	S	P	P		S						
• Senior Housing [5-15-53]		P	P	P	P	P	P		S						
• Shelter or Temp. Home [5-7-15-53]					S	S	S		S						S
Manufactured Home Class A		P	P	P	P	P	P								
Manufactured Home Park [7-8-15-43-53]						S	S								
Planned Unit Development [5-15]			S	S	S	S	S	S	S	S	S	S			

Residential notes:

- The city has discontinued the R-1, R-3, and R-5 zones and converted these discontinued zones to the following: R-1 see R-2; R-3 see R-4; and R-5 see R-6. The M-3 zone, which is limited to mining uses, has been consolidated with the M-2 zone.

- The Office "O" and Residential R-20 zones require direct access to a collector or arterial roadway.

- Footnotes are found on pages following these land use tables. (Ord. No. 2011-07, § 1, 12-20-2011; Ord. No. 2012-18, § 1, 11-6-2012)

Exhibit 'F'

Land Uses	Districts														
	A	R-2	R-4	R-6	R-8	R-12	R-20	O	C-1	C-2	C-3	CBD	M-1	M-2	P
COMMERCIAL															
Adult Bookstore 7-15-16									S						
Airport, Landing Field 15-26	S														S
Alcohol Consumption/Sales on-site/off-site 15-27		P 38	P 38	P 38	P 38	P 38	P 38	S	S	S	S	S	S 48		P 38
Amusement Center (indoor) 7-15									S	S	S	S			
Amusement Center (outdoor) 7-15									P	S	S				S
Animal Hospital/Clinic 7-15-26	S								P	P	P	P	P		S
Animal Shelter 7-15-26	S												S		S
Appliance Repair 7-15		S	S	S	S	S	S	P	P	P	P	P	P		
Aquarium 7-15								S	P	P	P	P	S		S
Arboretum 15		P	P	P	P	P	P	P	P	P	P	P			P
Archery Range 7-15-37	P	S							P 45	P 45			S		
Art Gallery/Studio 7-15-31		S	S	S	S	S	S	P	P	P	P	P	P		
Auction Sales 7-15-43	S 41	S 41							S	S	S		S		
Auditorium 7-15								S	P	P	P	P	S		
Automobile Detailing 7-15									P	P	P	S		P	
Automobile Maintenance 7-15									P	P	P	S		P	
Automobile Rental/Sale 15								S	P	P	P	P	P		
Automobile Repair Shop 7-15									P	P	P	S		P	
Bakery or Baked Goods Store 7-15		S	S	S	S	S	S	S	P	P	P	P	P		
Bank, Credit Union, Savings and Loan 7-15		S	S	S	S	S	S	P	P	P	P	P	P		
Banquet Facility 7-15-27		S	S	S	S	S	S	P	P	P	P	P			
Barber Shop 7-15		S	S	S	S	S	S	P	P	P	P	P	P		
Beauty Parlor/Shop 7-15		S	S	S	S	S	S	P	P	P	P	P	P		
Bicycle Shop 7-15		S	S	S	S	S	S	P	P	P	P	P	P		
Billboards 7-35	S									S	S			S	
Bookstore 7-15		S	S	S	S	S	S	P	P	P	P	P	P		
Botanical Garden 15		P	P	P	P	P	P	P	P	P	P	P	S		P
Bowling Alley 7-15								S	P	P	P	P			
Beer and Wine Production 7-15-27	P	S	P 11	P 11									S		
Cabinet Shop—Manufacturing 7-15									S	S	S		P	P	
Call Center 7-15											P	P	P		
Carnival/Circus 15-23									P	P	P	P			P
Car Wash 7-15								P	P	P	P	P	P		
Catering 7-15		S	S	S	S	S	S	P	P	P	P	P			
Cell Tower/Telecommunication 7-12-15	S	S						S	S	S	S	S	S	S	S
Cemetery or Mausoleum 15-30	P	S			S	S	S		S	S					S
Child Care and Unaccredited Preschool:															
• Home Child Care (1—6 children) 49-51		S	S	S	S										
• Group Child Care (7—12 children) 15-49-51		S	S	S	S			S	S	S	S				

Exhibit 'F'

Land Uses	Districts														
	A	R-2	R-4	R-6	R-8	R-12	R-20	O	C-1	C-2	C-3	CBD	M-1	M-2	P
COMMERCIAL															
• Child Care Center (13+ children) 7-15-49-51		S	S	S	S	S	S	S	S	S	S				
Church 7-15-36	S	S	S	S	S	S	S	S	S			S			
Community Center/Grange/Assembly Use 7-15	S	S	S	S	S	S	S	P	P	P					P
Convenience Store (not including fuel sales) 7-15									P	P	P	P	P		
Digital/Electronic Verbiage Signage 7-15								S	S	S	S		S	S	S
Dispatch Center 7-15-34-47									P	P	P	P	S		
Dog Grooming 7-15	P	P						P	P	P	P	P	P		
Drive-through Business 7-15-34			S	S	S	S	S	S	S	S	S	S	S		
Drive-in Restaurant 7-15-26-46								P	P	P	P	P			
Drive-in Theater 7-15	S	S							S	S	S				
Dry Cleaners (Coin or Attendant) 7-15								S	S	S	S	S	S		
Emergency Care Facility/Clinic 7-15		S	S	S	S	S	S	P	P	P	P	P	P		
Equipment Sales & Rental (Light Equipment) 7-15-21		S	S	S	S	S	S	S	P	P	P	S	S		
Exhibition Hall 7-15								P	P	P	P	P	S		
Fairground 7-15	S	S											S		S
Farmer's Market 15-23	S								S	S		P			P
Financial Services 7-15		S	S	S	S	S	S	P	P		P	P	P		
Florist 7-15		S	S	S	S	S	S	P	P	P	P	P	S		
Food Processing under 5,000 sq. ft. building 7-15-26										S	S	S	S	S	
Furniture Restoration/Refinishing 7-15									P	P	P	S	P	P	
Furniture Shop Retail 7-15								P	P	P	P	P	S		
Gift Shop 7-15		S	S	S	S	S	S	P	P	P	P	P			
Grocery Store/Delicatessen 7-15		S	S	S	S	S	S	P	P	P	P	P			
Golf Course and Country Club 7-15		P	P	P	P	P	P								P
Greenhouse/Nursery 7-15	S	P						P	P	P	P	P	S		
Handicraft 7-15-31		S	S	S	S	S	S	S	P	P	P	P			
Health Club 7-15		S	S	S	S	S	S	P	P	P	P	P	S		
Home Improvement Center 7-15								S	P	P	P	S			
Hospital 7-15						S	S	S	S	S	S	S			S
Hotel/Motel 7-15								S	S	S	S	S			
Kennel, Commercial 7-15-26	S								S						
Laboratory (Medical, Dental, Optical) 7-15		S	S	S	S	S	S	P	P	P	P	P	P	P	
Laundromat 7-15		S	S	S	S	S	S	S	S	S	S	S	S		
Library 7-15			S	S	S	S	S	P	P	P	P	P			P
Liquor Store 7-15-27								S	P	P	P	P			
Locksmith 7-15		S	S	S	S	S	S	P	P	P	P	P	P	P	

Exhibit 'F'

Land Uses	Districts														
	A	R-2	R-4	R-6	R-8	R-12	R-20	O	C-1	C-2	C-3	CBD	M-1	M-2	P
COMMERCIAL															
Manufactured Home Sales 7-15									S	S			S		
Marine Sales/Rental 7-15									S	S	S		S		
Massage Therapy 7-15		S	S	S	S	S	S	P	P	P	P	P	S		
Meat Market 7-15									P	P	P	S			
Mortuary 7-15								S	S	S	S	S	S		
Motorhome, Travel Trailer, Camper Park 7-15-29-43						S	S		S						
Museum or Planetarium 7-15								P	P	P	P	P			P
Office 7-15		S	S	S	S	S	S	P	P	P	P	P	P		
Office (Medical, Professional) 7-15		S	S	S	S	S	S	P	P	P	P	P	P		S
Office (Temporary Real Estate Subdivision Sales) 15		S	S	S	S	S	S								
Parking Lot or Facility, Park and Ride 7-15-47		S	S	S	S	S	S	P	P	P	P	P	P	P	P
Payday Lending Operation/ Nonchartered Institution 7-15									S						
Pawnshop 7-15									S						
Pharmacy 7-15								P	P	P	P	P	P		
Post Office 7-15								P	P	P	P	P			P
Printing, Blueprinting, Copy Center and Cartography 7-15								P	P	P	P	P	P	P	
Prison, Jail, etc. 7-15-33									S	S					S
Public Service Facility 7-15-18-19	S	S	S	S	S	S	S	S	S	S	S	S	S	S	S
Publishing 7-15		P	P	P	P	P	P	P	P	P	P	P	P		
Radio and TV Stations 7-15-18-19								S	P	P	P	S	P	S	
Restaurant 7-15-20-26		S	S	S	S	S	S	P	P	P	P	P			
Restaurant with Bar 7-15-27								S	S	S	S	S			
Retail Stores Services 7-15-28		S	S	S	S	S	S	P	P	P	P	P	S		
Rifle/Pistol Range 7-15-26	S	S							P 45	P 45					
Sales, Wholesale 7-15									S	S	S	S	P		
Sandwich Shop/Deli 7-15-22		S	S	S	S	S	S	P	P	P	P	P	S		
Sexual Oriented Business 7-15-16									S						
School (College/University) 7-15								S	S	S	S	S			S
School (Elementary, Middle & High School) 7-15		S	S	S	S	S	S	S	S	S					S
Service Station/Garage 7-15-34								S	S	S	S	S			
Shoe Repair 7-15		S	S	S	S	S	S	P	P	P	P	P	P	P	
Shop for Building Contractor 7-15									P	P	P		P	P	
Shopping Center 7-15									S	S	S	S			
Sign Shop 7-15									P	P	P	P	P	P	
Sports Arena 7-15									S	S	S	S	S		S
Storage Facility (public/private) 7-15-26-39-43:															
• Up to 2 acres 7-54						S	S	S	S	S			S		
• 2 to 5 acres 7-54								S	S	S			S		
• 5 to 10 acres 7-54										S			S		
• 10 acres or more 7-54													S		

Exhibit 'F'

Land Uses	Districts														
	A	R-2	R-4	R-6	R-8	R-12	R-20	O	C-1	C-2	C-3	CBD	M-1	M-2	P
COMMERCIAL															
Studio (Artist, Interior Decorators, Photographer, etc.) 15-31		S	S	S	S	S	S	P	P	P	P	P			
Studio (Art, Dance, Music, Voice) 15-31		S	S	S	S	S	S	P	P	P	P	P			
Swap Meet 15-23								S	S	S	S	S			S
Swimming Pool 15		S	S	S	S	S	S	S	S	S	S	S			S
Tattoo Parlors/Studios/Body Piercing Establishment 7-15									S			S			
Tavern/Bar/Nightclub/Lounge 7-15-27								S	S	S	S	S			
Taxidermy 7-15									S	S	S		P	P	
Temporary Tent 15-23-42	P								P	P	P		P		P
Theater 7-15								S	P	P	P	P			
Tire Shop (not recapping) 7-15									P	P	P	S	S		
Travel Agency 7-15		S	S	S	S	S	S	P	P	P	P	P			
Upholstery Shop 7-15									P	P	P		P	P	
Utility-Owned Building (public/ private) 7-15-18-19	S	S	S	S	S	S	S	S	S	S	S	S	P	P	S
Veterinary 7-15-26	S	S						P	P	P	P		P		
Vehicle Emission Testing Facility 7-15-34	S							P	P	P	P	P	P		
Wedding Chapel 7-15	P	S				S	S	P	P	P	P	P			
Wind Turbines/Farms/Mills 15-40	S	S											S	S	S
Zoo 7-15	S									S	S	S			P

Commercial notes:

- The city has discontinued the R-1, R-3, and R-5 zones and converted these discontinued zones to the following: R-1 see R-2 R-3 see R-4; and R-5 see R-6. The M-3 zone, which is limited to mining uses, has been consolidated with the M-2 zone.
- The Office "O" and Residential R-20 zones require direct access to a collector or arterial roadway.
- Commercial businesses are subject to individualized EDU evaluations.
- Footnotes are found on pages following these land use tables. (Ord. No. 2011-07, § 1, 12-20-2011; Ord. No. 2012-18, § 1, 11-6-2012)

Exhibit 'F'

Land Uses	Districts														
	A	R-2	R-4	R-6	R-8	R-12	R-20	O	C-1	C-2	C-3	CBD	M-1	M-2	P
INDUSTRIAL															
Asphalt Plant 7-15														S	
Automobile Body, Paint Shop 7-15									S	S	S	S	P	P	
Batch Plant 7-15-26														S	
Beverage Bottling Plant 7-15-26-53										S			S	S	
Billboard Manufacturing 7-15-53										S			S	S	
Cement or Clay Products Manufacturing 7-15-26-53														S	
Chemical Storage and Manufacturing 7-15-26-53														S	
Contractor's Storage Yard 7-26													S	S	
Dairy Product Processing 7-15-53	S												S	S	
Distributing Center 7-15-26-53													S	S	
Dry-Cleaning Plant 7-15-53													S	S	
Equipment Sales (Large and Heavy Equipment) 7-15-26-43													S	S	
Farm Implement, Trailer, Manufactured Home and Sales Yard 7	S								S	P			P	P	
Farm Implement, Trailer and Manufactured Home Repair 7-15	S								P	P			P	P	
Food Processing Plant over 5,000 sq. ft. building 7-15-26-53										S			S	S	
Freight Terminal 7-15-26-53													S	S	
Fuel Sales									S	S		S	S	S	
Fuel Yard (Explosive, Storage, Manufacturing) 7-15-26														S	
Fuel Yard (Nonexplosive, Storage and Retail) 7-15-26														S	
Grain (Feed and Seed Processing and Sales) 7-15	P												S	S	
Grain Storage—Bulk 7-15	P												S	S	
Hatcheries 7-15	P												S	S	S
Ice Manufacture—Cold Storage Plant 7-15													S	S	
Impound/Storage Yard (vehicle) 7-26-43														S	
Incineration (Garbage, Animal Remains or Refuse) 7-15-25-26-43	S													S	S
Junkyard/Wrecking Yard 7-15-26-43														S	
Laundry, Commercial Plant 7-15-53													S	P	
Lumberyard (Retail/Wholesale) 7-15-26-53-43									P	P	P		P	P	
Machine or Welding Shop 7-15									S	S			P	P	
Manufacturing, General 7-15-33-53	S										S		P	P	
Meatpacking Plant 7-15-26-53														P	
Monument Works, Stone 7-15									S	S	S		S	S	
Natural Resources, Mineral Extraction, Processing, Storage 26-32	S													S	S

Exhibit 'F'

Land Uses	Districts														
	A	R-2	R-4	R-6	R-8	R-12	R-20	O	C-1	C-2	C-3	CBD	M-1	M-2	P
INDUSTRIAL															
Railroad Buildings, Yard and Equipment 7-43-53	S												S	S	
Recycle Center/Recycle Staging Area 7-34-43										S	S		P	P	
Recycling Plant 7-15-43													S	P	
Regional Sewage and Waste Treatment Plant 7-24-33-43	S	S												S	S
Rendering Plant 7-25-26-53														S	
Sanitary Landfill 7-26-33-43															S
Slaughterhouses (enclosed within building) 7-15-25-26-53														S	
Supply Yard 7-26-43									S	S			S	P	
Terminal Yard Trucking 7-15-43-53													S	S	
Tire Recapping 7-15-53										S	S		S	S	
Truck and Tractor Repair 7-15-53	S								S	S	S		S	S	
Truck Maintenance 7-15									S	S	S		S	S	
Truck Stop 7-15-53										S	S		S		
Truck Wash 7-53									S	S	S		S	P	
Warehousing—Wholesale 7-15-53	S 41												S	P	
Wood Processing Plant (including firewood) 7-15-26										S				S	

Industrial notes:

- The city has discontinued the R-1, R-3, and R-5 zones and converted these discontinued zones to the following: R-1 see R-2; R-3 see R-4; and R-5 see R-6. The M-3 zone, which is limited to mining uses, has been consolidated with the M-2 zone.
- The Office "O" and Residential R-20 zones require direct access to a collector or arterial roadway.
- Footnotes are found on pages following these land use tables. (Ord. No. 2011-07, § 1, 12-20-2011; Ord. No. 2012-18, § 1, 11-6-2012)

Exhibit 'F'

LAND USE TABLES FOOTNOTES:

The following footnotes are intended as helpful reminders rather than representing an all inclusive list of requirements relative to a given land use; additionally, a footnote may not apply to a particular land use in every circumstance or an obligation may apply to a land use not covered by a footnote.

1. Any enterprise customarily carried on in the field of general agriculture, which is not obnoxious or detrimental to the public welfare. A commercial slaughterhouse or concentrated animal feeding operation [CAFO] is not allowed in the agricultural zone.

2. A limited number of cows, horses, sheep, goats and pot belly pigs may be kept on the premises as determined by the director in consultation with a licensed veterinarian; provided individual lots have an area of at least 33,000 square feet [.75 acre] and meet other requirements including those outlined KCC 10-3-5.

3. For the display and sale of agriculture products. A roadside stand requires a minimum of four (4) off-street parking spaces; however, the parking spaces do not need to be covered with an impervious parking surface because of the temporal nature of the business. The applicant is required to procure a business license from the city clerk prior to business usage and acquire a special use permit in certain zones. The site will also be evaluated for road access and circulation concerns.

4. Up to five (5) animals allowed; however, no roosters are permitted.

5. Parking shall be provided as follows: Single-family - two (2) spaces per dwelling unit to include duplexes; multifamily - one and one-half (1½) space per dwelling unit.

6. The upper and lower floors are available for residential living purposes but not at ground level.

7. Subject to design review.

8. For manufactured home subdivision, see KCC 6-5-3.

9. The fraternity or sorority must be affiliated with an institution of higher education and maintain a good standing with its parent organization.

10. The use must be contained within the structure.

11. Home consumption only; however, should the beer or wine be sold it is subject to KCC 3-1-1.

12. Height of a cell/communication tower is subject to height regulations found in KCC 5-4-6:B:5 and 5-5-2:F.

13. Security need only - not intended for residential use; family members are not to reside in the security dwelling.

14. Deleted by Ord. No. 2012-18.

Exhibit 'F'

15. The use requires adequate off-street parking and is subject to parking standards regulations found at KCC 5-9-1 through 5-9-5. Community gardens/urban gardens shall rely upon on-street parking and/or off-street parking on a case-by-case basis determined by site-specific characteristics.

16. See "sexual oriented business" regulations found at KCC 5-1-6-2 and 3-6. A sexually oriented business requires a city license, which is subject to annual renewal and the use is required to be separated a certain distance from other uses.

17. Deleted by Ord. No. 2012-18.

18. Cell towers or other telecommunication devices are subject to the zone's height regulations and the height provisions noted in KCC 5-4-6:B:5 and KCC 5-5-2:F.

19. The use is subject to height regulations.

20. The proprietor may serve alcoholic beverages at a table or booth with appropriate permits and licenses (see KCC 3-1-1).

21. The rental business may not store large or heavy equipment pieces on-site - those types of rental items are to be placed in the industrial zone.

22. No alcohol sales allowed.

23. Temporary vender permit required.

24. Package treatment plants, lift stations, lagoon systems, etc., may be installed in all zoning districts through a public works review process.

25. The site requires proper health permits and air quality evaluation.

26. The use is subject to the city's performance standards found at KCC 5-5.

27. Alcoholic beverages require city licensure according to the provisions of KCC 3-1-1. Consumption of alcohol on-premises is prohibited within 300 feet of a school or place of worship as measured from the primary entrance, unless the city council provides relief from that distance requirement. The three hundred-foot distance separation requirement does not apply to temporary beer and wine licenses procured by way of catering license.

28. For hardship cases see KCC 5-6-10.

29. Recreational vehicle park or campground development; see KCC 4-2B-1.

30. For a cemetery subdivision requirements; see KCC 6-5-6.

31. The use may qualify as a home occupation; see KCC 5-5-4.

32. This is an M-3 land use category that has been placed with M-2 category uses. Natural resource activities are subject to state laws.

33. The use is subject to any number of local, state and federal requirements.

Exhibit 'F'

34. The use is subject to transportation analysis.

35. Billboards are limited to certain land use zones and permitted there by way of a special use permit.

36. A church may provide for child care, food service, shelter or school facilities within the zoning districts where these uses are allowed, unless the director determines the use to be incidental to church related function in which circumstance these noted uses will be allowed in all zones where a church is permitted.

37. The use is subject to the rifle and pistol range performance standards; see KCC 5-5-4.

38. Temporary beer and wine licenses are permitted in these zones by way of a catering license approved by the city council. The three hundred-foot distance separation requirement does not apply to temporary beer and wine licenses procured by way of catering license.

39. The city has constructed a storage facility check list to assist the applicant develop this type of land use.

40. The placement of a windmill or wind turbine is subject to certain height and setback provisions that are determined on a case by case basis through the special use permitting process. The placement of these structures in proximity to Kuna Butte is discouraged.

41. Must be agriculturally related.

42. The use not to exceed sixty (60) days at the location.

43. The following uses are declared to require sight obstruction type fencing: Junkyards, wrecking yards, equipment or vehicle salvage storage yards, trailer parks, auction blocks, lumberyards, RV parks, sanitary landfills, recycling collection stations and temporary recycling collection stations, and any other similar type uses; see 5-5-5:G:3 for details.

44. Deleted by Ord. No. 2012-18.

45. Indoor range.

46. Drive-in restaurant subject to performance standards found at KCC 5-5-4.

47. A taxi dispatch operation shall be conducted from a physical location that meets applicable zoning standards. A dispatch operation shall not be conducted by way of a home occupation permit. A taxi operator living within the City of Kuna is allowed to have one vehicle at their residence when not in use; however, a taxicab dispatch operation cannot be conducted from a city residence or in a city residential zoning district. Kuna-based taxicab dispatch centers shall be subject to the city's zoning standards. Taxi vehicles shall be stored on property zoned for their accommodation. Any parking area established for taxicab operation, and related storage, shall be subject to the city's design review prior to its usage.

48. For special events only.

49. Preschools that are not state accredited are designated as a child care facility and require a special use permit. Preschools that are accredited fall within the elementary school category.

Exhibit 'F'

50. Deleted by Ord. No. 2012-18.

51. Child care facilities require a minimum of forty (40) square feet of usable indoor space per child and eighty (80) square feet of usable outdoor space per child.

52. An ordinance needs to be approved adopting this accessory dwelling unit land use.

53. The use is subject to individualized EDU evaluation.

54. Any large vehicle, motorhome, 5th-wheel trailer, boat, etc., will be subject to special buffering requirements. The developer will need to provide the city with a binding site plan reflecting how they intend to develop the storage facility site. The developer shall follow the prescriptions laid out in the city's storage facility development guide. (Ord. No. 2011-07, § 1, 12-20-2011; Ord. No. 2012-18, § 1, 11-6-2012)

Exhibit 'F'

5-3-3: OFFICIAL HEIGHT AND AREA STANDARDS:

MINIMUM YARD AND SQUARE FOOTAGE REQUIREMENTS

Zoning District	Maximum Height	Minimum Street Frontage	Front Yard Setback On A Local Road	Front Yard Setback On An Arterial Or Collector Street	Rear Yard Setback	Interior Side Yard Setback	Street Side Yard Setback	Maximum Lot Coverage	Minimum Lot Size
A	45'	0'*	20' from lot line	30'	30'	10' from lot line	15'	90%	5 acres
R-2	35'	120'	20'	30'***	15'	5'	20'	40%	20,000 sq. ft.
R-4	35'	66'	20'	30'***	15'	5'	20'	40%	6,600 sq. ft.
R-6	35'	45'	20'	30'***	15'	5'	20'	40%	4,500 sq. ft.
R-8	35'	40'	20'	30'***	15'	5'	20'	40%	3,300 sq. ft.
R-12	40'	40'	20'	30'***	15'	5'	20'	60%	2,200 sq. ft.
R-20	40'	40'	20'	30'***	15'	5'	20'	60%	1,300 sq. ft.
O	35'	0*	20'	0	30'	5'	20'	80% DR	2,000 sq. ft.
C-1	35'	0*	15'	0	5'	0	10'	100% DR	2,000 sq. ft.
C-2	60'	0*	0	0	0	0	0	100% DR	1,300 sq. ft.
C-3	60'	0*	0	0	0	0	0	100% DR	1,300 sq. ft.
CBD	80'**	0*	0	0	0	0	0	100% DR	1,000 sq. ft.
M-1	60'	0*	0	0	0	0	0	100% DR	5,000 sq. ft.
M-2/M-3	60'	0*	0	0	0	0	0	100% DR	5,000 sq. ft.
P	60'	0*	0	0	0	0	0	100% DR	400 sq. ft.

Notes:

The city has discontinued the R-1, R-3, and R-5 zones and converted these discontinued zones to the following: R-1 see R-2; R-3 see R-4; and R-5 see R-6. The M-3 zone, which is limited to mining uses, has been consolidated with the M-2 zone.

The terms property owner, applicant, controller and developer are used interchangeably.

* It is presumed the parcel's street frontage will be of a sufficient width to accommodate the placement of a driveway entrance for those uses fronting on a street where they have driveway access.

** Building heights above sixty (60) feet, and especially habitable spaces located above that height, may require the procuring of special safety equipment or fire apparatus.

Exhibit 'F'

Traffic Impact Study

Merlin Subdivision
Kuna, Idaho

PROFESSIONAL ENGINEER
REGISTERED
7910
4/25/13
STATE OF IDAHO
DANIEL A. THOMPSON

Prepared For:

A Team Land Consultants
Whisper Cove Ave
Boise, ID 8370

April 25, 2013

Thompson Engineers
Traffic and Civil Inc.
181 East 50th St
Garden City, ID 83714
(208) 484-4410

Table of Contents

EXECUTIVE SUMMARY 1
Introduction 1
Proposed Development 1
Study Area 1
Conclusions 1
INTRODUCTION 3
PROPOSED DEVELOPMENT 4
STUDY AREA CONDITIONS 5
Study Area 5
Land Use 5
STUDY PERIOD 5
Build Out Year 5
Horizon Year 5
EXISTING CONDITIONS 5
Traffic Volumes 5
Road System 5
System Improvements 8
PROJECTED TRAFFIC 8
Background Traffic 8
Off Site Traffic 8
Daily Traffic 8
Trip Generation 11
Trip Distribution 13
Site Traffic 13
Total Traffic 13
TRAFFIC ANALYSIS 19
Capacity Analysis and Level of Service 19
Intersection Analysis 20
Roadway Analysis 21
Site Access 21
Site Circulation 21
Turn Lanes 21
Signal Warrant Analysis 22
Internal Circulation 213
DISCUSSIONS 235
Roadway Improvements 235
Required Due to Existing Traffic Conditions 235
Required Due to Background Traffic Conditions 235
Required Due to Total Traffic Conditions 23
Preservation of Right-of-Way 235
On-site Traffic 235
Traffic Signal 215
CONCLUSIONS 235

EXECUTIVE SUMMARY

Introduction

Thompson Engineers, Inc. has been retained to prepare a traffic impact study for the proposed Merlin Subdivision in Kuna, Idaho, approximately as shown in **Figure 1**. The purpose of this study is to evaluate the potential traffic impacts resulting from the project and make recommendations for mitigation of the impacts. The study is prepared in accordance with the requirements of the Ada County Highway District.

Proposed Development

The project is a multi use development including approximately 60 townhouses, 232 multifamily dwelling units, a warehouse store, 38,000 SF of office space, and 95,000 SF of specialty retail including a bank, a quality restaurant, and a gas station.

The site is expected to access the transportation system via SH 69 (Meridian Rd.) via four deeded approaches. The main access is proposed to align with Kuna Road in the southeast corner of the site. The other three access points have not been determined at this time.

Study Area

The area of influence is anticipated to be southwest Ada County, Idaho, including the City of Kuna. The primary impacts will be along SH 69, with secondary impacts along Linder Road. The study area will include the intersections of SH69 and Columbia Rd., SH69 and Hubbard Rd., SH69 and Deer Flat Rd., SH69 and Kuna Rd., Linder/Avalon Rd. and Swan Falls Rd., and Linder and 3rd/Main St.

Conclusions

Below are the findings of this report:

- Based on the trip generation methods recommended in the Trip Generation Manual, the site will generate 11,109 trips per day of which 453 trips will occur during the AM peak hour and 918 trips will occur during the PM peak hour.
- The site will access the transportation system via SH 69 via four deeded approaches. One approach is a right-in-right-out located at the west end of the project. Site traffic will primarily access the site through three approaches shown. For this report, all traffic is assumed to be distributed to three approaches.
- The main entrance of the site will operate at an acceptable level of service as design if the intersection is signalized. The main entrance is designed to align with Kuna Road on the southeast side of SH69. The intersection is anticipated to satisfy MUTCD Warrants 1 and 3.
- The site would be best served if the signal were located at the center entrance. This location in undesirable because it is located on a curve. However, it is also located at the intersection of two section line roads, aligns with an existing road that has

significant traffic, and has a lower speed limit than further north. The two mile spacing meets existing spacing on SH 69. Moving the signal north would place it in a 55 mph speed zone and create an uneven signal spacing. Moving it west would create a signal spacing problem with future signals in Kuna.

- The intersection of Deer Flat Road and Linder Road will operate at acceptable levels of service under background and total traffic conditions in build out year. The critical peak hour is in the AM peak hour due to the proximity of the high school.
- The intersection of Deer Flat Road and SH 69 will operate at acceptable levels of service under background and total traffic conditions in the build out year. The critical peak hour is in the PM peak hour.
- The intersection of Columbia Road and SH 69 will operate at acceptable levels of service under background and total traffic conditions in the build out year. The critical peak hour is in the PM peak hour.
- The intersection of Hubbard Road and SH 69 will operate at acceptable levels of service under background and total traffic conditions in the build out year. The critical peak hour is in the PM peak hour.
- The intersection of Avalon Road and Swan Falls Road will operate at acceptable levels of service under background and total traffic conditions in the build out year. The critical peak hour is in the PM peak hour.
- The intersection of Linder Road and Main Street operates as three separate stop controlled intersections. All of these intersections will operate at acceptable levels of service under background and total traffic conditions in the build out year. The critical peak hour is in the PM peak hour.
- The site access points are anticipated to operate at acceptable levels of service if a signal is provided at the main entrance.
- The proposed site plan provides good internal circulation via an internal commercial roadway.

INTRODUCTION

Thompson Engineers, Inc. has been retained to prepare a traffic impact study for the proposed Merlin Subdivision in Kuna, Idaho, approximately as shown in **Figure 1**. The purpose of this study is to evaluate the potential traffic impacts resulting from the project and make recommendations for mitigation of the impacts. In particular, the scope of the study includes the following:

- Trip Generation of the proposed development
- Trip distribution and traffic assignment of the site generated traffic
- The capacity of the transportation system to support the development.
- Intersection treatment of the site access points.

Figure 1 Project Location

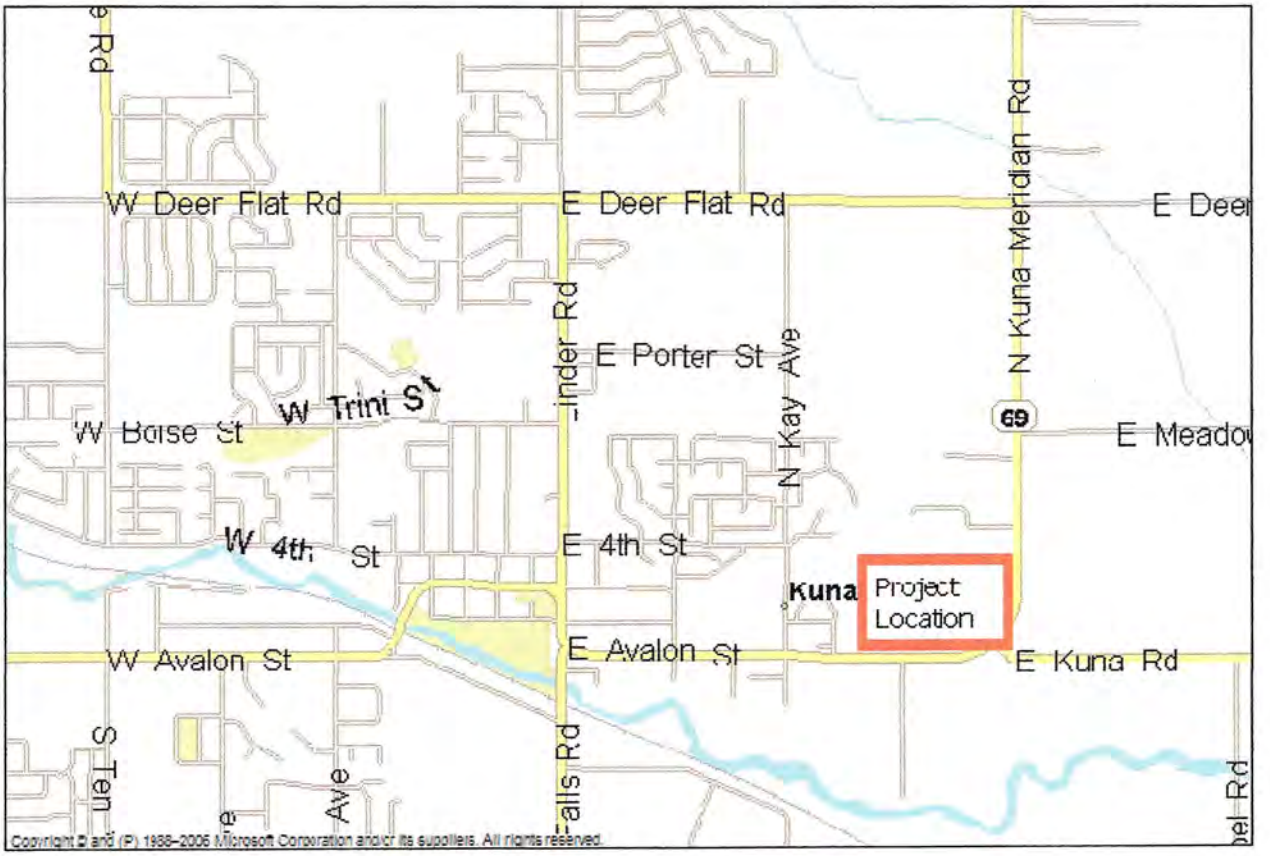

PROPOSED DEVELOPMENT

The project is a multi use development including approximately 60 townhouses, 232 multifamily dwelling units, a warehouse store, 38,000 SF of office space, and 95,000 SF of specialty retail including a bank, a quality restaurant, and a gas station. The final site plan was not finalized at the time of this report. A preliminary site plan is shown in **Figure 2**.

The site is expected to access the transportation system via SH 69 (Meridian Rd.) via four deeded approaches. The main access is proposed to align with Kuna Road in the southeast corner of the site. The other three access points have not been determined at this time. For this study, only two other access points are considered.

Figure 2 Preliminary Site Plan

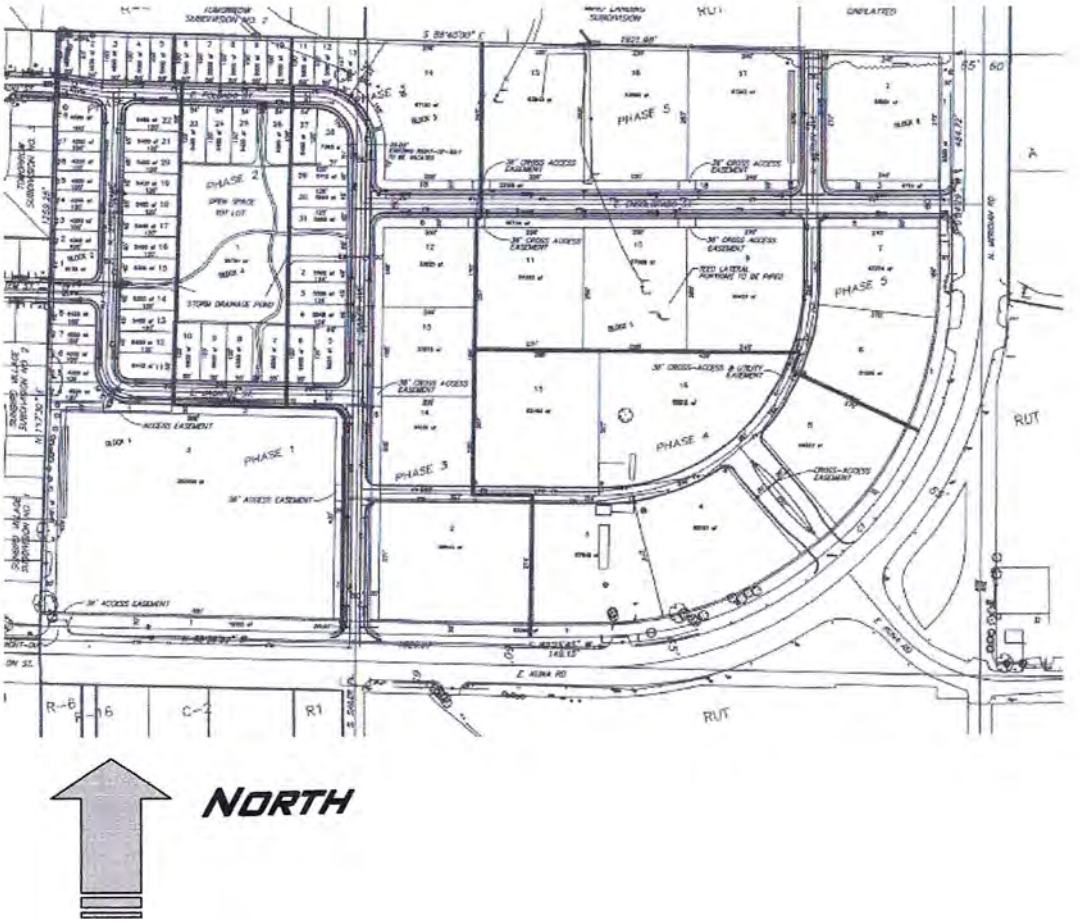

STUDY AREA CONDITIONS

Study Area

The area of influence is anticipated to be southwest Ada County, Idaho, including the City of Kuna. The primary impacts will be along SH 69, with secondary impacts along Linder Road. The study area will include the intersections of SH69 and Columbia Rd., SH69 and Hubbard Rd., SH69 and Deer Flat Rd., SH69 and Kuna Rd., Linder/Avalon Rd. and Swan Falls Rd., and Linder and 3rd/Main St.

Land Use

The site is within the Kuna area of impact and is currently partially vacant. Existing zoning and land uses are for agricultural uses. A zoning change is proposed to allow commercial development. The site will be annexed to the City of Kuna.

STUDY PERIOD

Build Out Year

The Build out Year for this project is assumed to be 2017 to correspond with COMPASS data. The actual build out of the site will depend on market conditions and project implementation.

Horizon Year

2030 was selected as the horizon year, in accordance with the requirements of the Ada County Highway District.

EXISTING CONDITIONS

Traffic Volumes

AM and PM Traffic counts were obtained at the intersections in the study area the week of October 15, 2012. Existing AM Peak Hour traffic volumes are shown in **Figure 3A**. Existing PM Peak Hour traffic volumes are shown in **Figure 3B**.

Road System

SH 69 (Meridian Road) is classified as a principal arterial road by COMPASS. In the vicinity of this project, it has two through lanes in each direction, eight foot wide shoulders and a center left turn lane. Lanes are approximately 12 feet wide. It does not have curb and gutter on either side of the roadway. There are multiple driveways on both sides of the highway. It has a posted speed of 45 MPH in front of the project, but is posted for 55 MPH north of the site.

As the highway enters the City of Kuna, it reduces to two lanes with a posted speed limit of 25 MPH. Access is basically uncontrolled, with multiple urban approaches on both sides of the road.