NOTES:

(A) ALL PRODUCTS AS LISTED OR APPROVED SUBSTITUTIONS

(B) WHEN CONSTRUCTING THIS BLOW-OFF AS TEMPORARY USE, INSTALL A 3' LENGTH OF PIPE INTO THE BELL END OF THE LAST LENGTH OF WATERMAIN

LEGEND:

1. 2" THREADED COUPLING FEMALE X FEMALE ADAPTER
2. 2" MALE ADAPTER CAP
3. 2" THREADED GALVANIZED PIPE
4. ¼" DRAIN HOLE DRILLED PERPENDICULAR TO DRAIN LINE
5. PRE-CAST CONCRETE BLOCKS WEDGED IN PLACE
6. 2" THREADED GALVANIZED 90° ELBOW
7. 2" GATE VALVE
8. 2" THREADED GALVANIZED NIPPLE

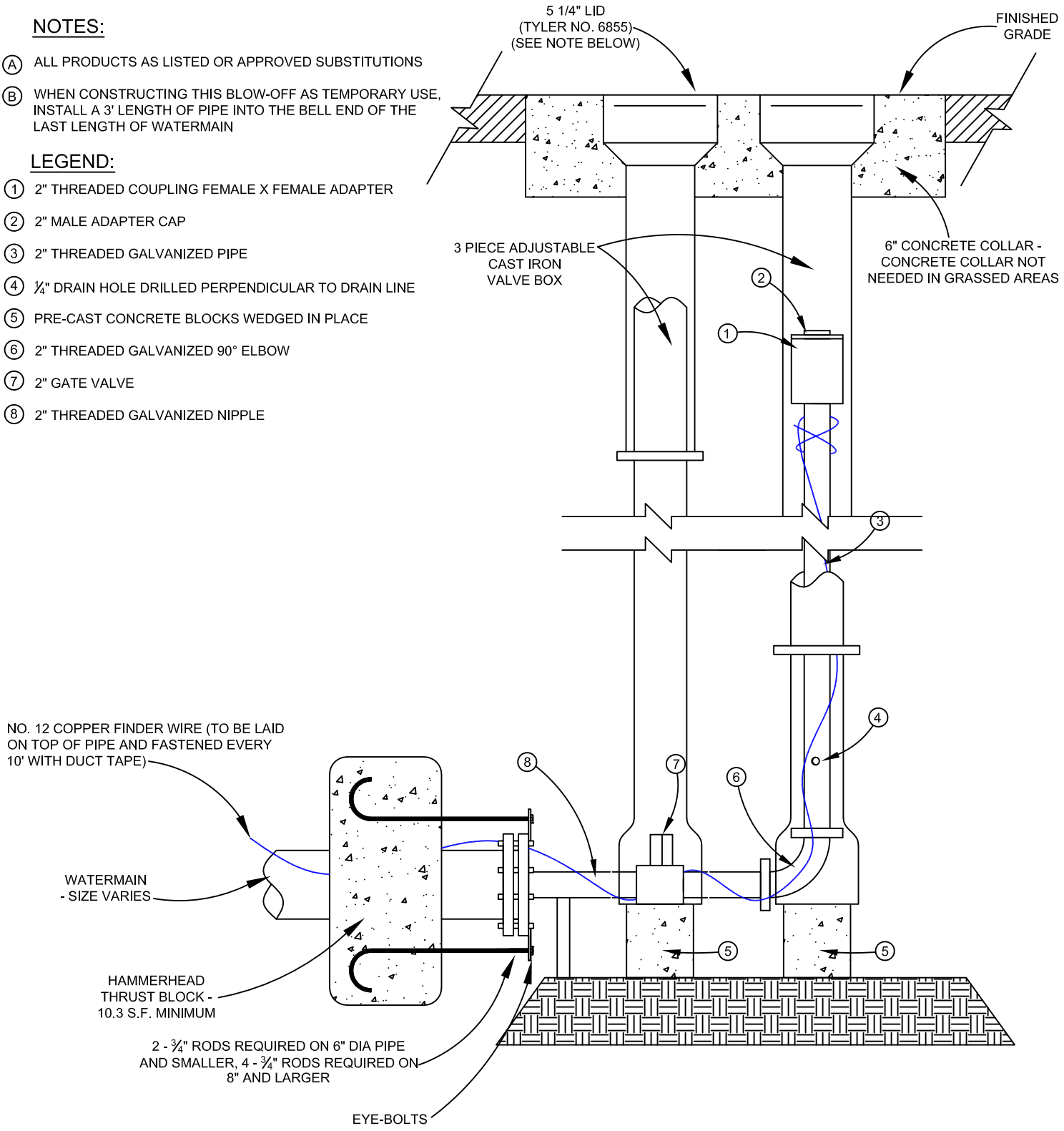

ALL PRODUCTS AS LISTED OR APPROVED SUBSTITUTIONS

v.8/10/2020

CITY OF KUNA
763 W AVALON AVE
KUNA, ID 83634
(208) 922-5546

2" BLOW-OFF DETAIL (IN R/W)

WATER & PRESSURE IRRIGATION (TYPICAL)

TO BE USED ON MAINS <12" DIA

KUNA STD DWG COK-405R

NOTES:

(A) ALL PRODUCTS AS LISTED OR APPROVED SUBSTITUTIONS

(B) WHEN CONSTRUCTING THIS BLOW-OFF AS TEMPORARY USE, INSTALL A 3' LENGTH OF PIPE INTO THE BELL END OF THE LAST LENGTH OF WATERMAIN

LEGEND:

1. 2" THREADED COUPLING FEMALE X FEMALE ADAPTER
2. 2" MALE ADAPTER CAP
3. 2" THREADED GALVANIZED PIPE
4. ¼" DRAIN HOLE DRILLED PERPENDICULAR TO DRAIN LINE
5. PRE-CAST CONCRETE BLOCKS WEDGED IN PLACE
6. 2" THREADED GALVANIZED 90° ELBOW
7. 2" GATE VALVE
8. 2" THREADED GALVANIZED NIPPLE
9. PRE-CAST 2" GRADE RING USED TO SUPPORT CMP (X 35" O.D.) CONCRETE
10. 30" CMP CUT TO LENGTH IN THE FIELD FOR BLOW-OFF OUTSIDE THE R/W. WITHIN R/W USE ROAD GRADE MANHOLE
11. 4" X 35" O.D. PRE-CAST CONCRETE GRADE RING MIN 2-4" GRADE RING, MAX 2-4" GRADE RING AND 2-4" GRADE RING (OTHERWISE CMP EXTENSION AND CMP BAND)

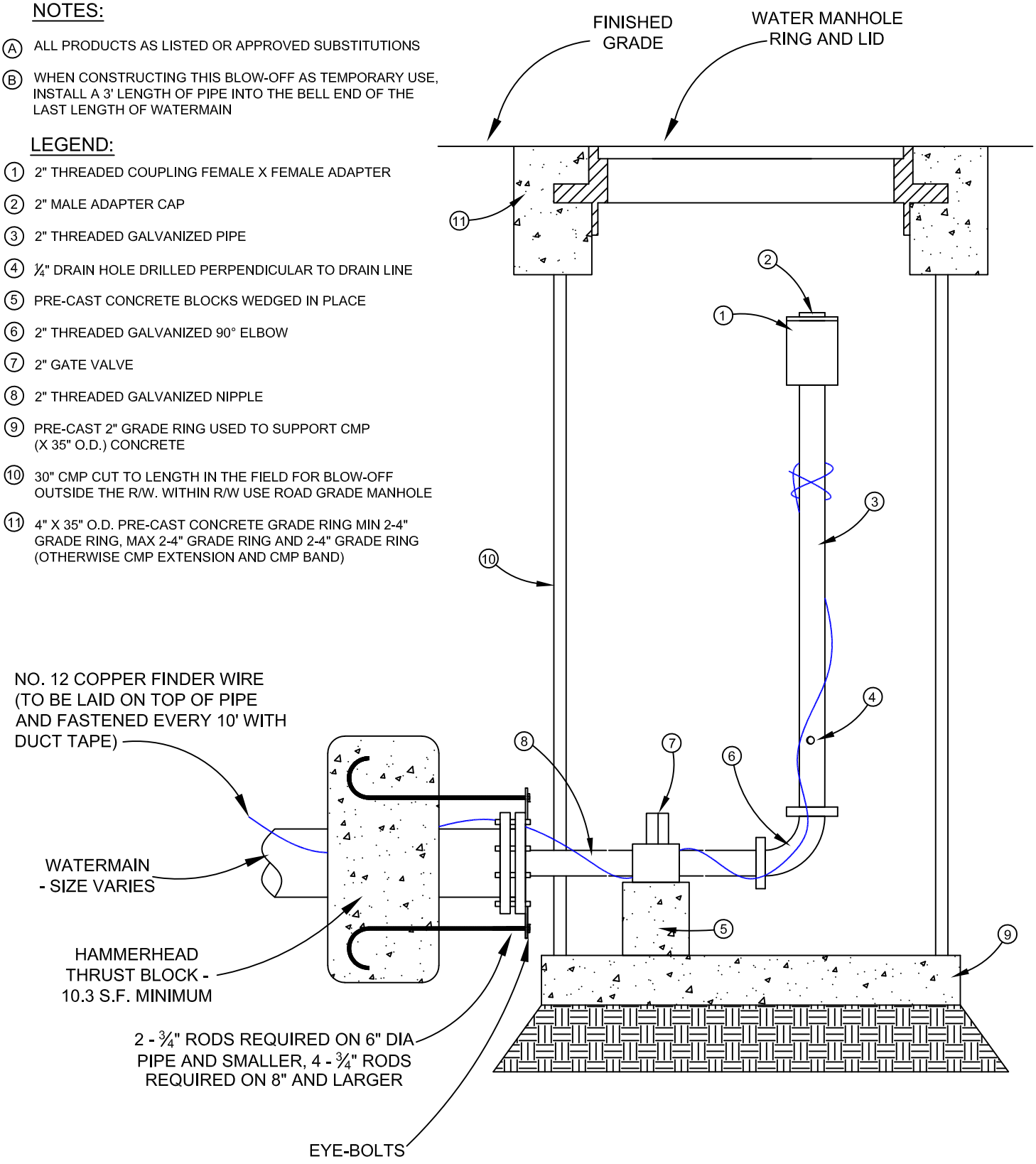

ALL PRODUCTS AS LISTED OR APPROVED SUBSTITUTIONS

v.8/10/2020

CITY OF KUNA
763 W AVALON AVE
KUNA, ID 83634
(208) 922-5546

2" BLOW-OFF DETAIL (NOT IN R/W)

WATER & PRESSURE IRRIGATION (TYPICAL)

TO BE USED ON MAINS <12" DIA

KUNA STD DWG COK-405

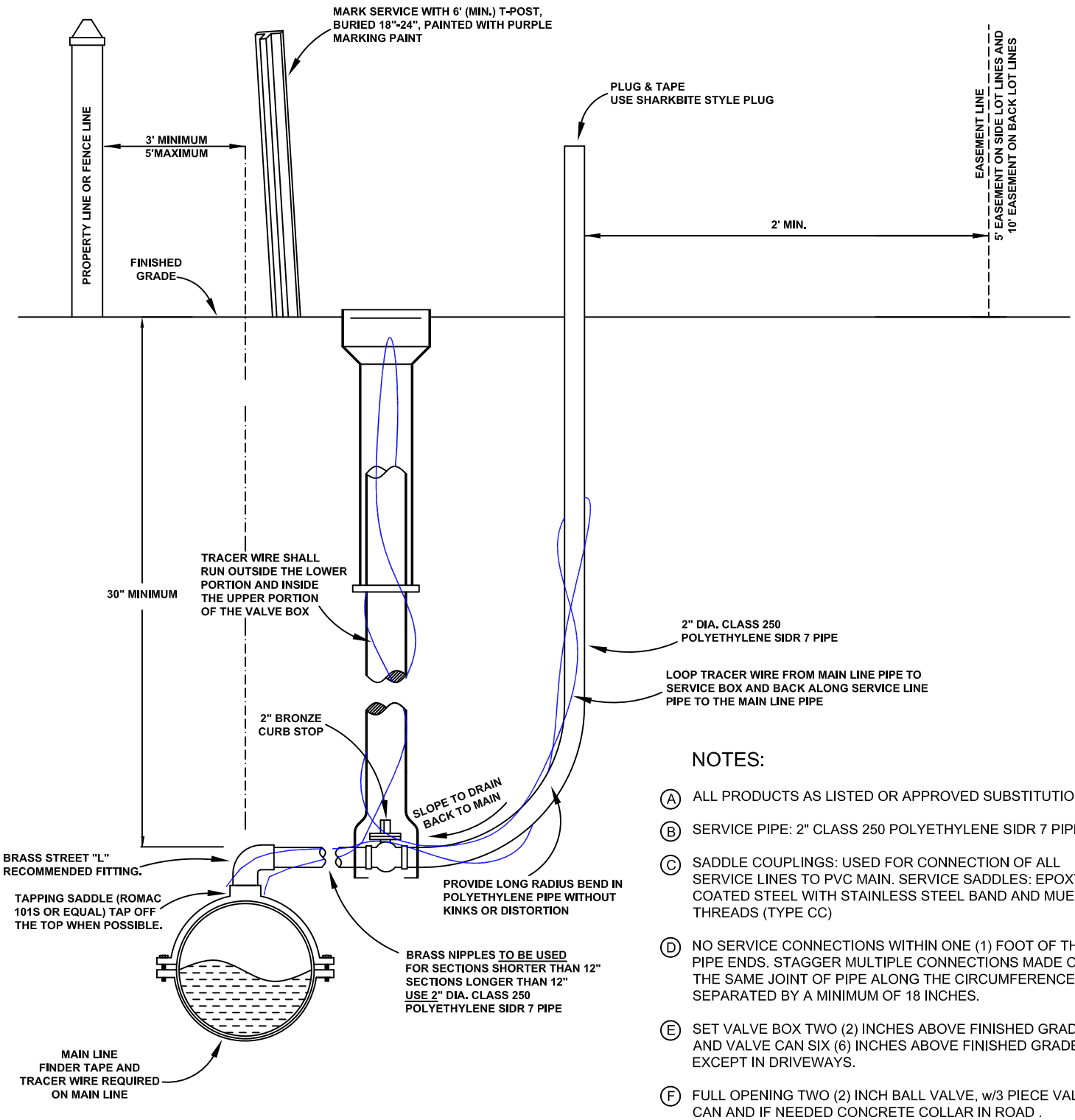

ALL CONNECTIONS SHALL BE MADE USING COMPRESSION BRASS GRIP JOINT/PACK JOINT FITTINGS. NO HOSE CLAMPS WILL BE ALLOWED.

NOTES:

- (A) ALL PRODUCTS AS LISTED OR APPROVED SUBSTITUTIONS
- (B) SERVICE PIPE: 2" CLASS 250 POLYETHYLENE SIDR 7 PIPE
- (C) SADDLE COUPLINGS: USED FOR CONNECTION OF ALL SERVICE LINES TO PVC MAIN. SERVICE SADDLES: EPOXY COATED STEEL WITH STAINLESS STEEL BAND AND MUELLER THREADS (TYPE CC)
- (D) NO SERVICE CONNECTIONS WITHIN ONE (1) FOOT OF THE PIPE ENDS. STAGGER MULTIPLE CONNECTIONS MADE ON THE SAME JOINT OF PIPE ALONG THE CIRCUMFERENCE AND SEPARATED BY A MINIMUM OF 18 INCHES.
- (E) SET VALVE BOX TWO (2) INCHES ABOVE FINISHED GRADE AND VALVE CAN SIX (6) INCHES ABOVE FINISHED GRADE, EXCEPT IN DRIVEWAYS.
- (F) FULL OPENING TWO (2) INCH BALL VALVE, w/3 PIECE VALVE CAN AND IF NEEDED CONCRETE COLLAR IN ROAD .
- (G) MARK SERVICE WITH T-POST, BURIED 18"-24", PAINTED WITH PURPLE MARKING PAINT
- (H) ALL LOCATOR WIRE SPLICES SHALL USE PRO-TRACE DB CONNECTORS

v.8/10/2020

CITY OF KUNA
763 W AVALON AVE
KUNA, ID 83634
(208) 922-5546

PRESSURIZED IRRIGATION

OVERSIZED RESIDENTIAL 2" SERVICE MAIN SIDE (SHORT SIDE)

KUNA STD DWG KIRR-06

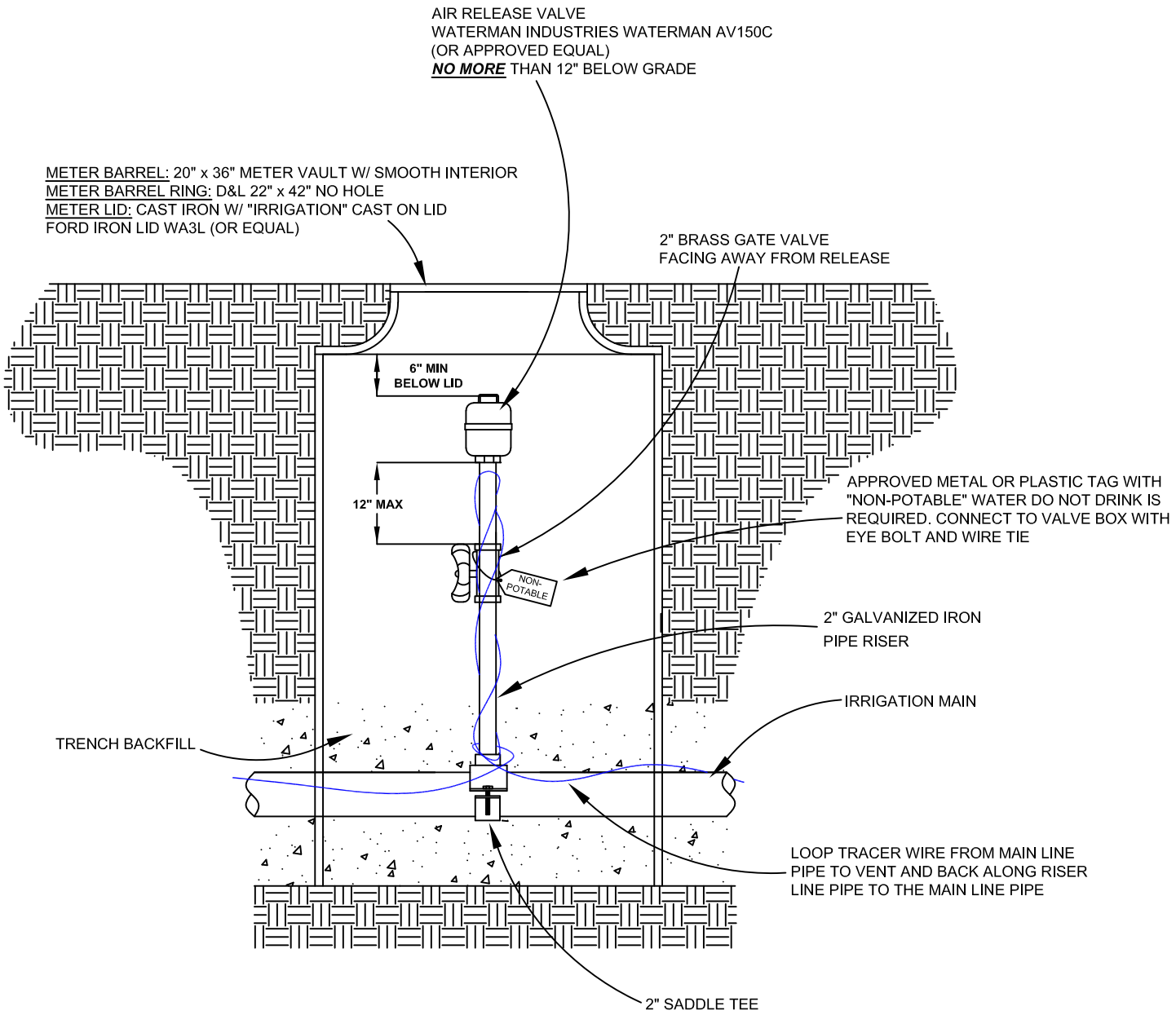

ALL PRODUCTS AS LISTED OR APPROVED SUBSTITUTIONS

v.8/10/2020

CITY OF KUNA
763 W AVALON AVE
KUNA, ID 83634
(208) 922-5546

PRESSURIZED IRRIGATION

AIR RELEASE VALVE

KUNA STD DWG KIRR-02

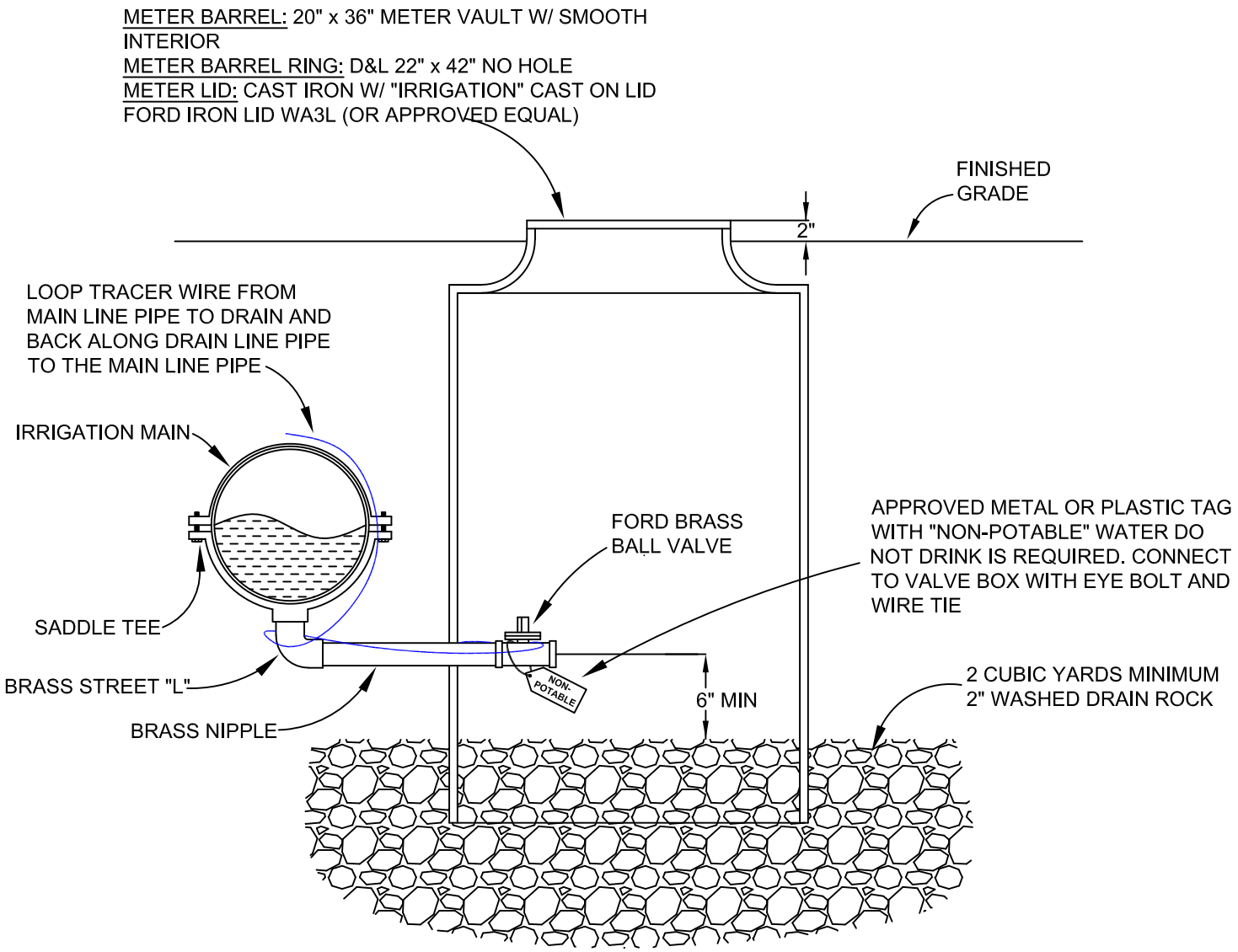

NOTES:

INSTALL MAIN LINE DRAINS AS REQUIRED AT ALL LOW POINTS TO PROVIDE COMPLETED DRAINAGE WINTER SHUT DOWN OF IRRIGATION SYSTEM

DRAIN PIPE AND FITTING SIZES SHALL USE BEST MANAGEMENT PRACTICES (BMP), PREFERRED SIZES INCLUDE 1-1/2" AND 2" DRAINS.

*****ALL PRODUCTS AS LISTED OR APPROVED SUBSTITUTIONS*****

v.8/10/2020

CITY OF KUNA
763 W AVALON AVE
KUNA, ID 83634
(208) 922-5546

PRESSURIZED IRRIGATION

DRAIN VALVE

KUNA STD DWG KIRR-03

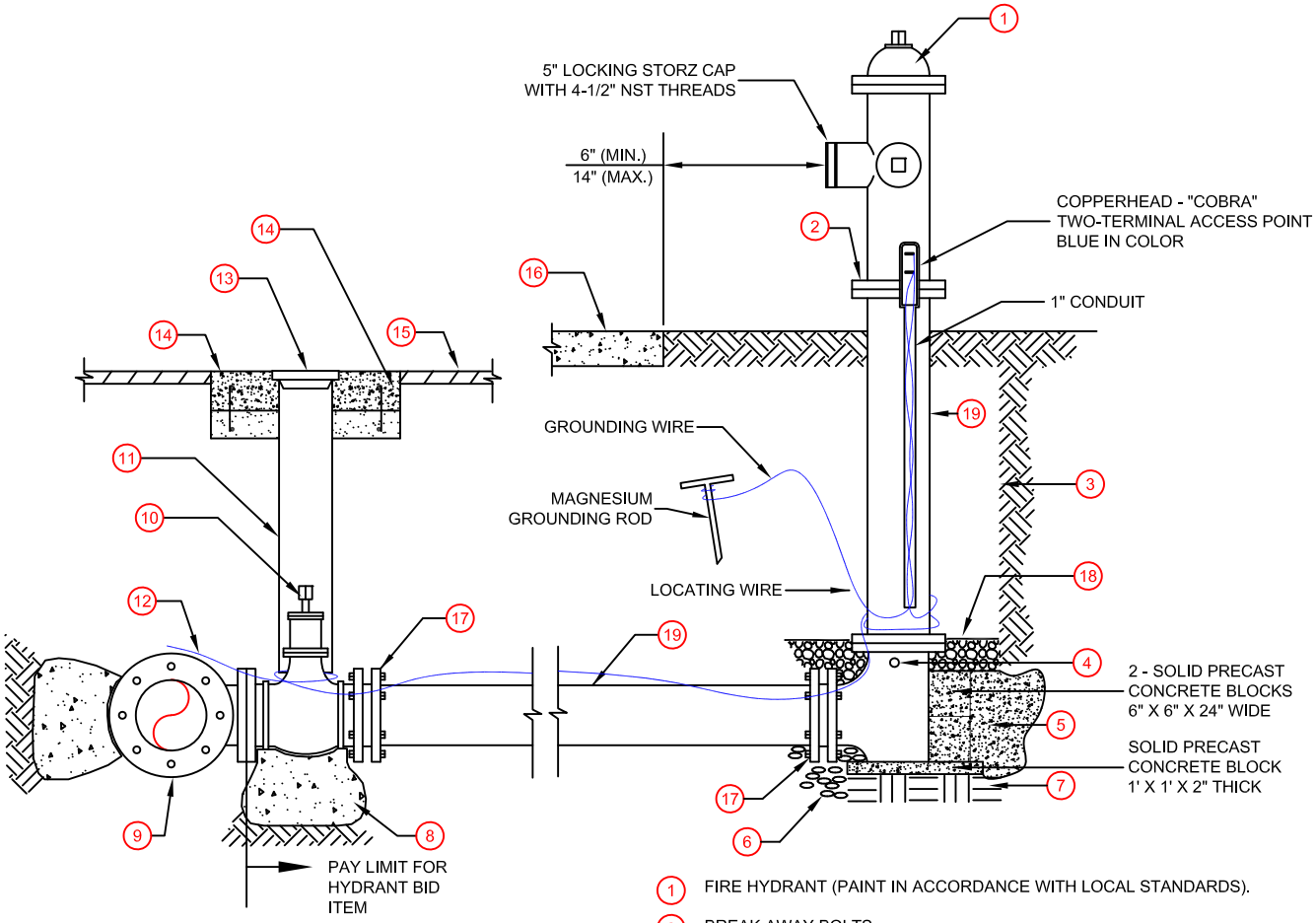

FIRE HYDRANT DETAIL

N.T.S.

NOTES:

- (A) HYDRANTS THAT ARE TO BE RELOCATED AS CALLED FOR ON THE PLAN VIEW SHALL BE REINSTALLED IN ACCORDANCE WITH THIS DETAIL. LOCATION TO BE SET IN ACCORDANCE WITH LOCAL STANDARDS OR AS DIRECTED BY THE ENGINEER.
- (B) ALL AUXILIARY VALVES TO BE LOCATED AT THE TEE ON THE WATER MAIN AS SHOWN ON THIS DETAIL OR AS DIRECTED BY THE ENGINEER. WHERE EXISTING FITTINGS ARE NOT COMPATIBLE WITH NEW MAIN CONSTRUCTION, USE SUITABLE ADAPTERS OR NEW FITTINGS UPON APPROVAL BY THE ENGINEER.
- (C) ALL ANCHORS AND BLOCKING TO BEAR AGAINST UNDISTURBED SOIL.
- (D) IF WATER SERVICE TO HYDRANT IS TO COMMENCE PRIOR TO SETTING OF CONCRETE THRUST BLOCKING, USE A COMBINATION OF CONCRETE AND UNI-FLANGE SERIES 1300 JOINT RESTRAINT.
- (E) PLACE LOCATOR WIRE DIRECTLY ABOVE PIPE. SECURE FINDER WIRE UNDER (MJ) BOLT AT MAIN.
- (F) JOINT RESTRAINT DEVICES MAY BE USED AS AN ALTERNATE TO THRUST BLOCK WITH ENGINEER'S APPROVAL.
- (G) ALL LOCATOR WIRE SPLICES SHALL USE PRO-TRACE DB CONNECTORS

1. FIRE HYDRANT (PAINT IN ACCORDANCE WITH LOCAL STANDARDS).
2. BREAK AWAY BOLTS.
3. END OF TRENCH, EDGE OF RIGHT-OF-WAY.
4. DRAIN - KEEP CLEAR.
5. CAST IN PLACE CONCRETE THRUST BLOCK (4 SQ. FT. OF THRUST BLOCK REQUIRED) (SEE NOTE D).
6. 1" DRAIN ROCK EXTENDS 12" HORIZONTALLY FROM EACH SIDE OF CONCRETE BASE AND THRUST BLOCK AND VERTICALLY TO 2" ABOVE HYDRANT DRAIN WALL.
7. PRECAST CONCRETE BLOCK 1' X 1' X 6" THICK.
8. VALVE SUPPORT (PRECAST OR CAST IN PLACE).
9. TEE (MJ X MJ X FLANGE) WITH THRUST BLOCK.
10. 6" C.I. AUXILIARY VALVE (MJ X FLANGE).
11. CAST IRON VALVE BOX PER KUNA STANDARD DWG COK-400
12. NO. 12 AWG. COPPER WIRE FINDER. SEE SD-514 FOR SPLICING (SEE NOTE E).
13. 5 1/4" LOCKING LID (TYLER NO. 6855).
14. 24"Ø X 6" CONCRETE COLLAR WITH (2) #4 REBAR HOOPS.
15. FINISHED GRADE.
16. SIDEWALK.
17. MECHANICAL CONNECTION.
18. COVER DRAIN ROCK WITH FILTER FABRIC.
19. 6" DIAMETER PIPE.

ALL PRODUCTS AS LISTED OR APPROVED SUBSTITUTIONS

v.8/10/2020

CITY OF KUNA
763 W AVALON AVE
KUNA, ID 83634
(208) 922-5546

KUNA FIRE HYDRANT DETAIL WITH STORZ ADAPTOR

KUNA STD DWG COK-404

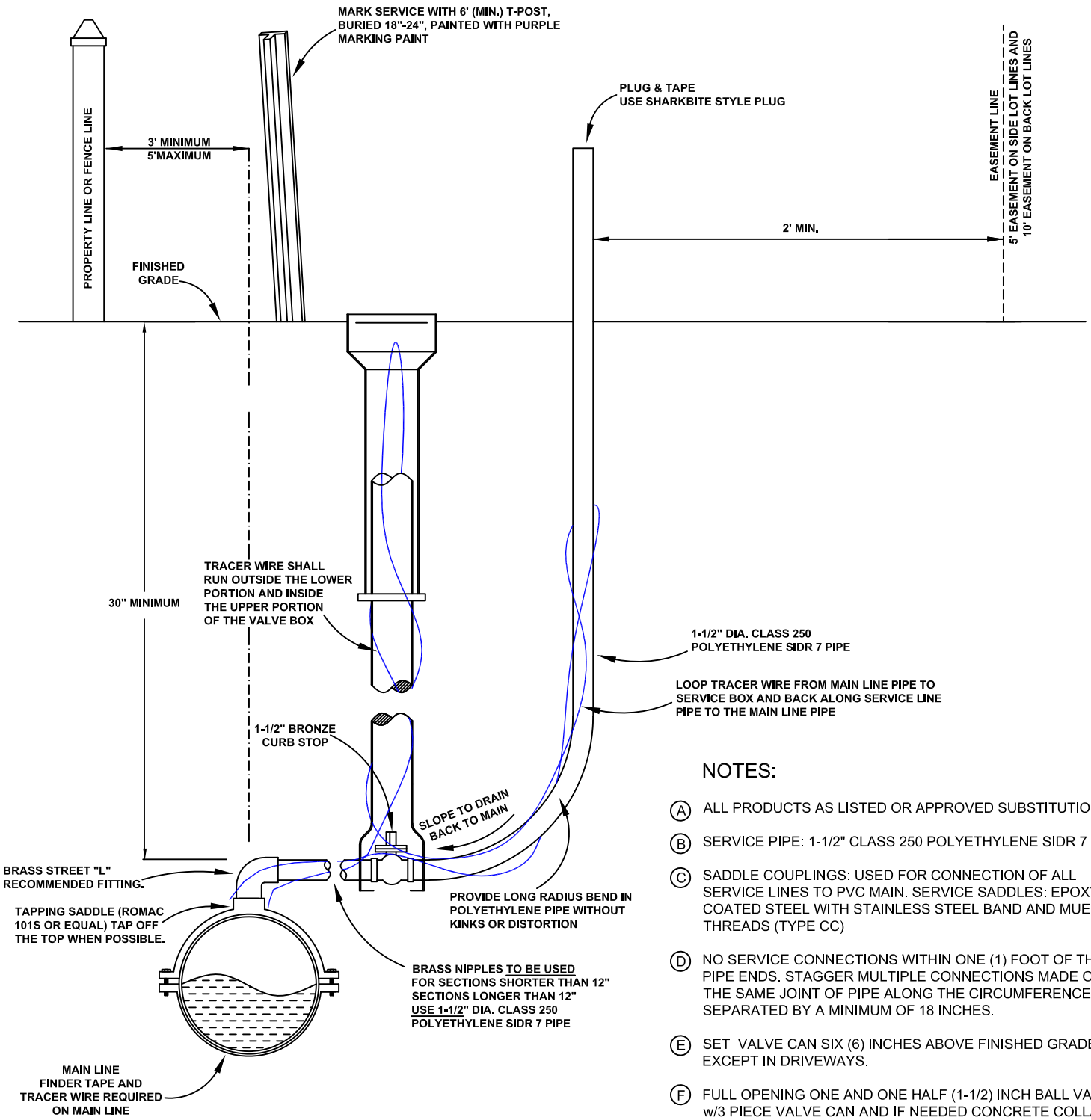

ALL CONNECTIONS SHALL BE MADE USING COMPRESSION BRASS GRIP JOINT/PACK JOINT FITTINGS. NO HOSE CLAMPS WILL BE ALLOWED.

NOTES:

(A) ALL PRODUCTS AS LISTED OR APPROVED SUBSTITUTIONS

(B) SERVICE PIPE: 1-1/2" CLASS 250 POLYETHYLENE SIDR 7 PIPE

(C) SADDLE COUPLINGS: USED FOR CONNECTION OF ALL SERVICE LINES TO PVC MAIN. SERVICE SADDLES: EPOXY COATED STEEL WITH STAINLESS STEEL BAND AND MUELLER THREADS (TYPE CC)

(D) NO SERVICE CONNECTIONS WITHIN ONE (1) FOOT OF THE PIPE ENDS. STAGGER MULTIPLE CONNECTIONS MADE ON THE SAME JOINT OF PIPE ALONG THE CIRCUMFERENCE AND SEPARATED BY A MINIMUM OF 18 INCHES.

(E) SET VALVE CAN SIX (6) INCHES ABOVE FINISHED GRADE, EXCEPT IN DRIVEWAYS.

(F) FULL OPENING ONE AND ONE HALF (1-1/2) INCH BALL VALVE, w/3 PIECE VALVE CAN AND IF NEEDED CONCRETE COLLAR IN ROAD .

(G) MARK SERVICE WITH T-POST, BURIED 18"-24", PAINTED WITH PURPLE MARKING PAINT

(H) ALL LOCATOR WIRE SPLICES SHALL USE PRO-TRACE DB CONNECTORS

v.8/10/2020

CITY OF KUNA
763 W AVALON AVE
KUNA, ID 83634
(208) 922-5546

PRESSURIZED IRRIGATION

OVERSIZED RESIDENTIAL 1-1/2" SERVICE

KUNA STD DWG KIRR-07

PLAN VIEW

N.T.S.

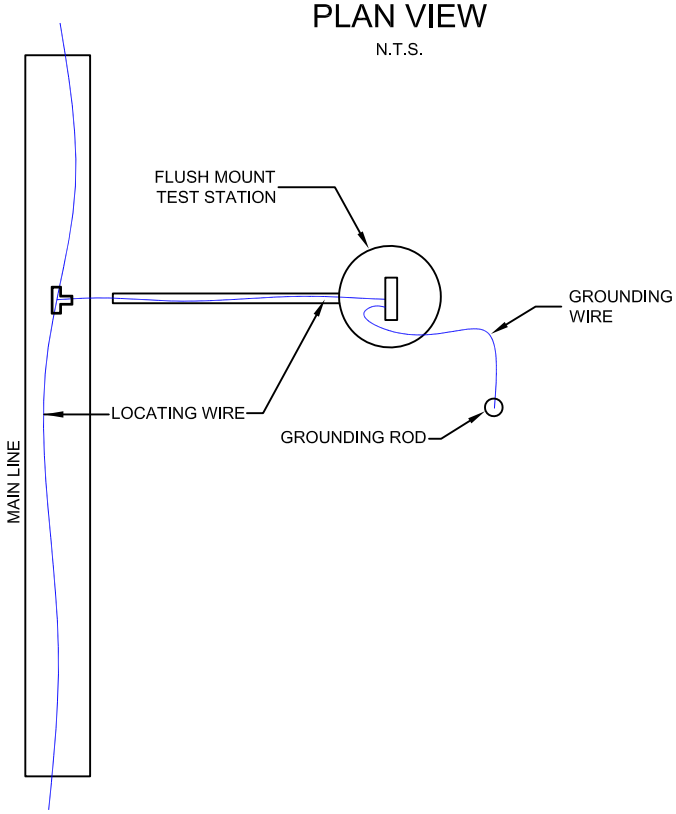

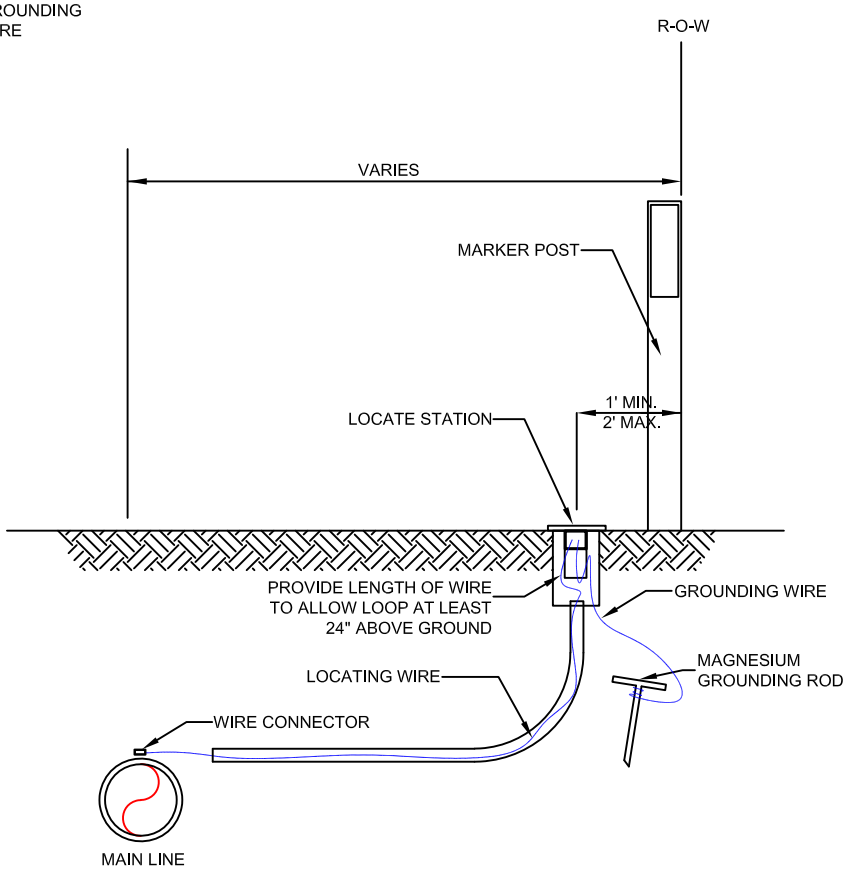

LOCATING STATION DETAIL

N.T.S.

NOTES:

- (A) FLUSH MOUNT TEST STATION SHALL BE COLORED BLUE FOR POTABLE WATER, PURPLE FOR IRRIGATION WATER, GREEN FOR SEWER AND ORANGE FOR COMMUNICATIONS.
- (B) MARKER POST SHALL BE FIBERGLASS WITH POLYTECH COATING COLORED BLUE FOR POTABLE WATER, PURPLE FOR IRRIGATION WATER, GREEN FOR SEWER WATER AND ORANGE FOR COMMUNICATIONS.
- (C) PLACE LOCATING WIRE IN 1' DIAMETER POLYETHYLENE I.P.S. CLASS 200 PIPE.
- (D) LOCATING WIRE AND GROUNDING WIRE SHALL BE CONNECTED TO LOCATING PLATE TERMINALS ON TERMINAL BOARD.
- (E) ALL LOCATOR WIRE SPLICES SHALL USE PRO-TRACE DB CONNECTORS

ALL PRODUCTS AS LISTED OR APPROVED SUBSTITUTIONS

v.8/10/2020

CITY OF KUNA
763 W AVALON AVE
KUNA, ID 83634
(208) 922-5546

KUNA LOCATING STATION

KUNA STD DWG COK-410

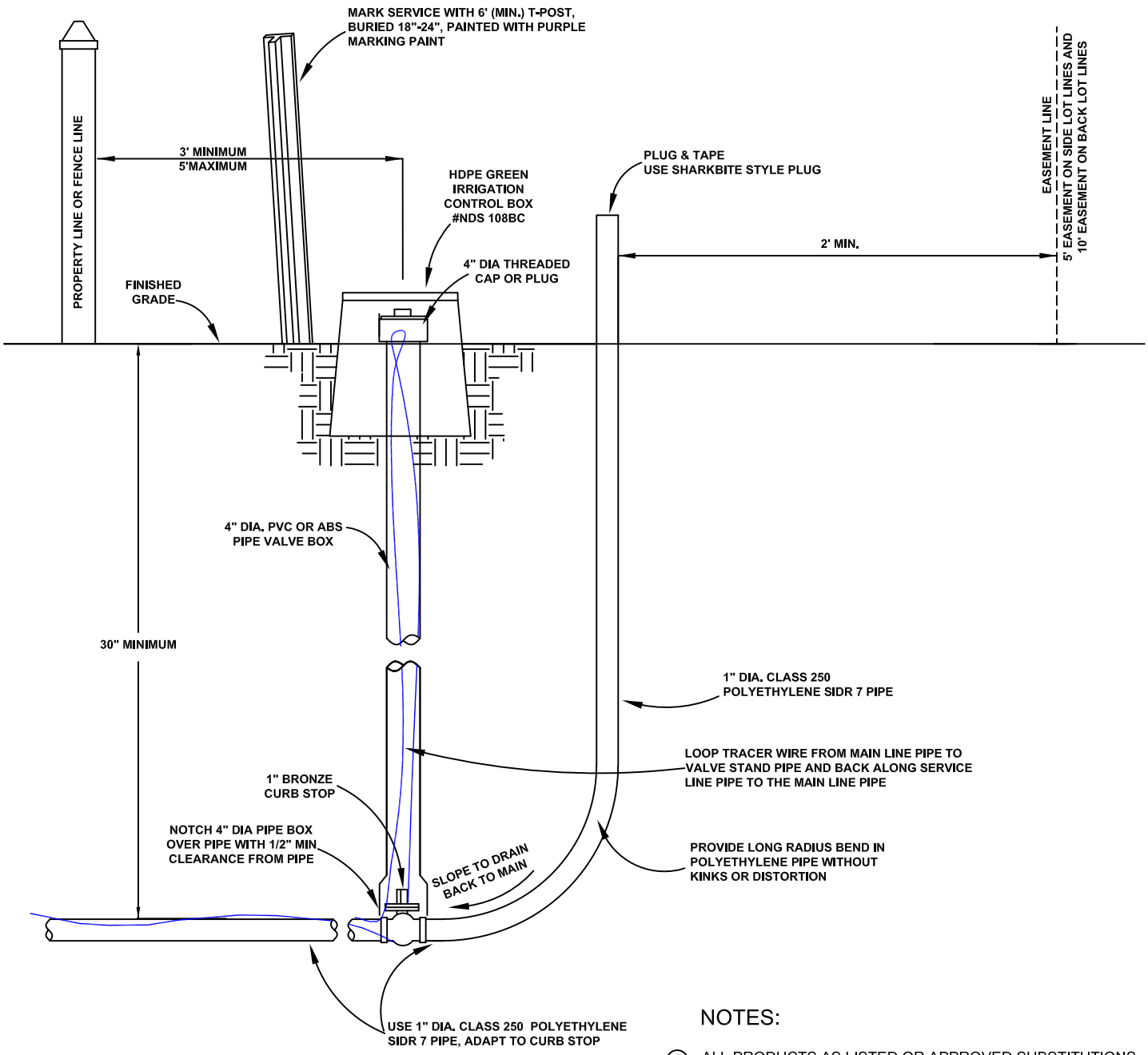

ALL CONNECTIONS SHALL BE MADE USING COMPRESSION BRASS GRIP JOINT/PACK JOINT FITTINGS. NO HOSE CLAMPS WILL BE ALLOWED.

NOTES:

(A) ALL PRODUCTS AS LISTED OR APPROVED SUBSTITUTIONS

(B) SADDLE COUPLINGS: USED FOR CONNECTION OF ALL SERVICE LINES TO PVC MAIN. SERVICE SADDLES: EPOXY COATED STEEL WITH STAINLESS STEEL BAND AND MUELLER THREADS (TYPE CC)

(C) NO SERVICE CONNECTIONS WITHIN ONE (1) FOOT OF THE PIPE ENDS. STAGGER MULTIPLE CONNECTIONS MADE ON THE SAME JOINT OF PIPE ALONG THE CIRCUMFERENCE AND SEPARATED BY A MINIMUM OF 18 INCHES.

(D) ALL LOCATOR WIRE SPLICES SHALL USE PRO-TRACE DB CONNECTORS

(E) MARK SERVICE WITH 6' (MIN.) T-POST, BURIED 18"-24", PAINTED WITH PURPLE MARKING PAINT

v.8/10/2020

CITY OF KUNA
763 W AVALON AVE
KUNA, ID 83634
(208) 922-5546

PRESSURIZED IRRIGATION

STANDARD RESIDENTIAL 1" SERVICE
MAIN SIDE (LONG SIDE)
KUNA STD DWG KIRR-02.2

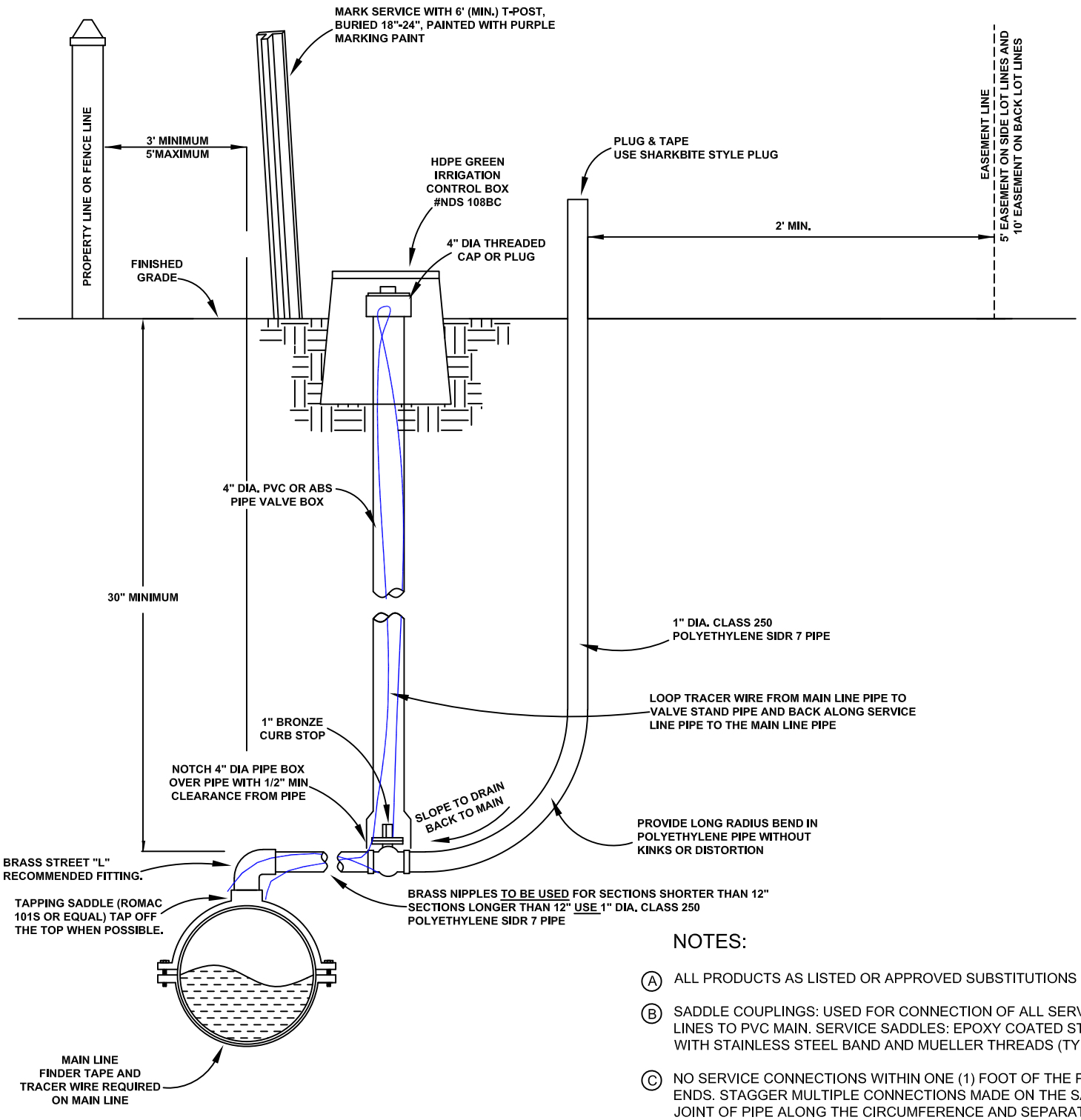

ALL CONNECTIONS SHALL BE MADE USING COMPRESSION BRASS GRIP JOINT/PACK JOINT FITTINGS. NO HOSE CLAMPS WILL BE ALLOWED.

NOTES:

(A) ALL PRODUCTS AS LISTED OR APPROVED SUBSTITUTIONS

(B) SADDLE COUPLINGS: USED FOR CONNECTION OF ALL SERVICE LINES TO PVC MAIN. SERVICE SADDLES: EPOXY COATED STEEL WITH STAINLESS STEEL BAND AND MUELLER THREADS (TYPE CC)

(C) NO SERVICE CONNECTIONS WITHIN ONE (1) FOOT OF THE PIPE ENDS. STAGGER MULTIPLE CONNECTIONS MADE ON THE SAME JOINT OF PIPE ALONG THE CIRCUMFERENCE AND SEPARATED BY A MINIMUM OF 18 INCHES.

(D) ALL LOCATOR WIRE SPLICES SHALL USE PRO-TRACE DB CONNECTORS

(E) MARK SERVICE WITH 6' (MIN.) T-POST, BURIED 18"-24", PAINTED WITH PURPLE MARKING PAINT

v.8/10/2020

CITY OF KUNA
763 W AVALON AVE
KUNA, ID 83634
(208) 922-5546

PRESSURIZED IRRIGATION

STANDARD RESIDENTIAL 1" SERVICE MAIN SIDE (SHORT SIDE)

KUNA STD DWG KIRR-02.1

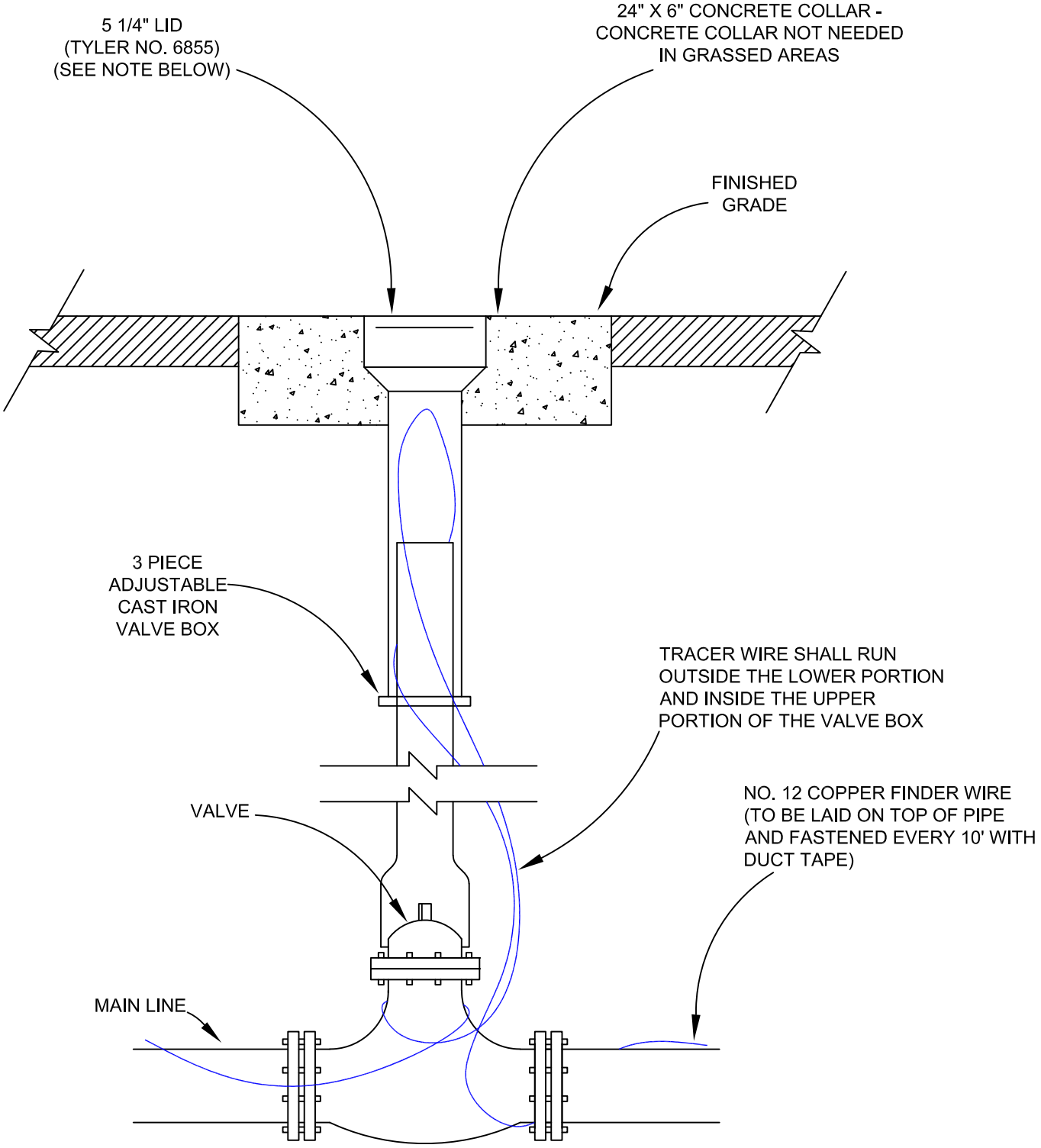

ALL PRODUCTS AS LISTED OR APPROVED SUBSTITUTIONS

v.8/10/2020

CITY OF KUNA
763 W AVALON AVE
KUNA, ID 83634
(208) 922-5546

PRESSURIZED IRRIGATION

PRESSURE IRRIGATION (TYPICAL)
MAIN LINE VALVE
KUNA STD DWG COK-400

LEGEND:

1. 6-#4 VERTICAL REBAR
2. 6" LAP
3. ANCHOR BOLT SIZES AND LOCATIONS PER MANUFACTUR'S SPECIFICATIONS
4. 4" TO 6" STUBS
5. INSULATED BUSHING REQUIRED WHEN CONDUIT IS USED PER MANUFACTURER'S SPECIFICATIONS
6. PER MANUFACTURER'S SPECIFICATIONS
7. SIDE WALK LINE OR GRADE LINE
8. J-BOX
9. 1" MINIMUM DIAMETER
10. (4) ANCHOR BOLTS WITH DOUBLE NUTS FOR PLUMBING POLE GALVANIZED, WITH (3) GALVANIZED NUTS AND (2) GALVANIZED WASHERS PER BOLT
11. 4-#4 REBAR HOOPS
12. C-3000 CONCRETE AS PER SECTION 700 ISPWC
13. USSL-A01-D-U-T3-MA-BK - 57w INTERIOR - SUBDIVISION
    USSL-A02-D-U-T3-MA-BK - 87w EXTERIOR - R/W LIGHTS
14. STEEL SQUARE STRAIGHT LIGHTING POLES -
    ASSS25XX411BL - 25' - 4" - 11 GAUGE - INTERIOR SUBDIVISION
    ASSS30XX511BL - 30' - 5" - 11 GAUGE OR APPROVED EQUAL - EXTERIOR R/W LIGHTS
15. FUSE LOCATION
16. WATER-TIGHT HANDHOLE
17. BACKFILL TO BE COMPACTED TO 95% OF ASTM D698
18. BLACK BACKGROUND WHITE NUMBER VINYL STICKERS 1-1/2" X 2-1/2"

NOTES:

A. SEE ISPWC FOR EXCAVATION, BACKFILLING AND CONSTRUCTION OF POLE FOUNDATION, WIRING, AND ACCEPTANCE OR REJECTION OF THE WORK.

B. GROUND POLE TO THE SERVICE POINT VIA #6 AWG BARE WIRE PER NATIONAL ELECTRICAL CODE.

C. #10 AWG WIRE FROM LUMINAIRE TO FUSE.

D. FOR GROUNDING DETAILS SEE-1117.

E. COLOR TERMPERATURE 3,000K TO 4,000K

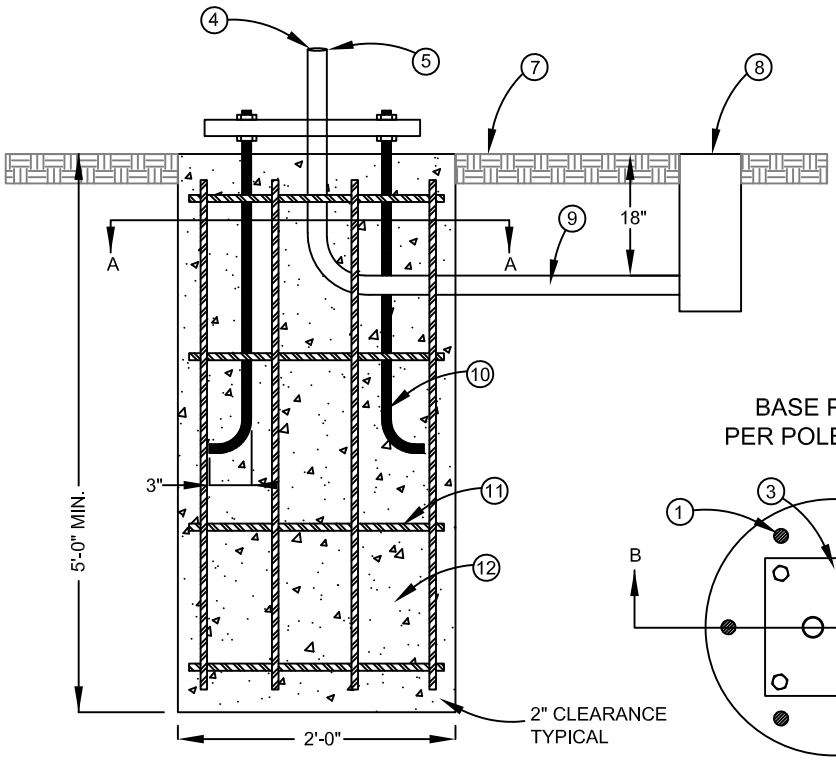

SECTION B-B

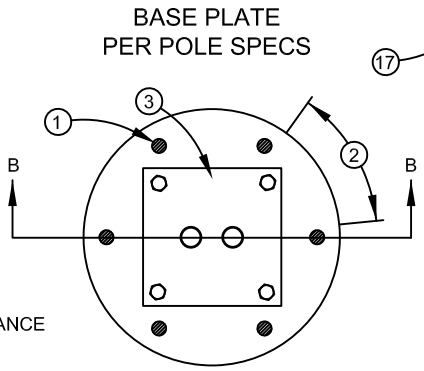

SECTION A-A

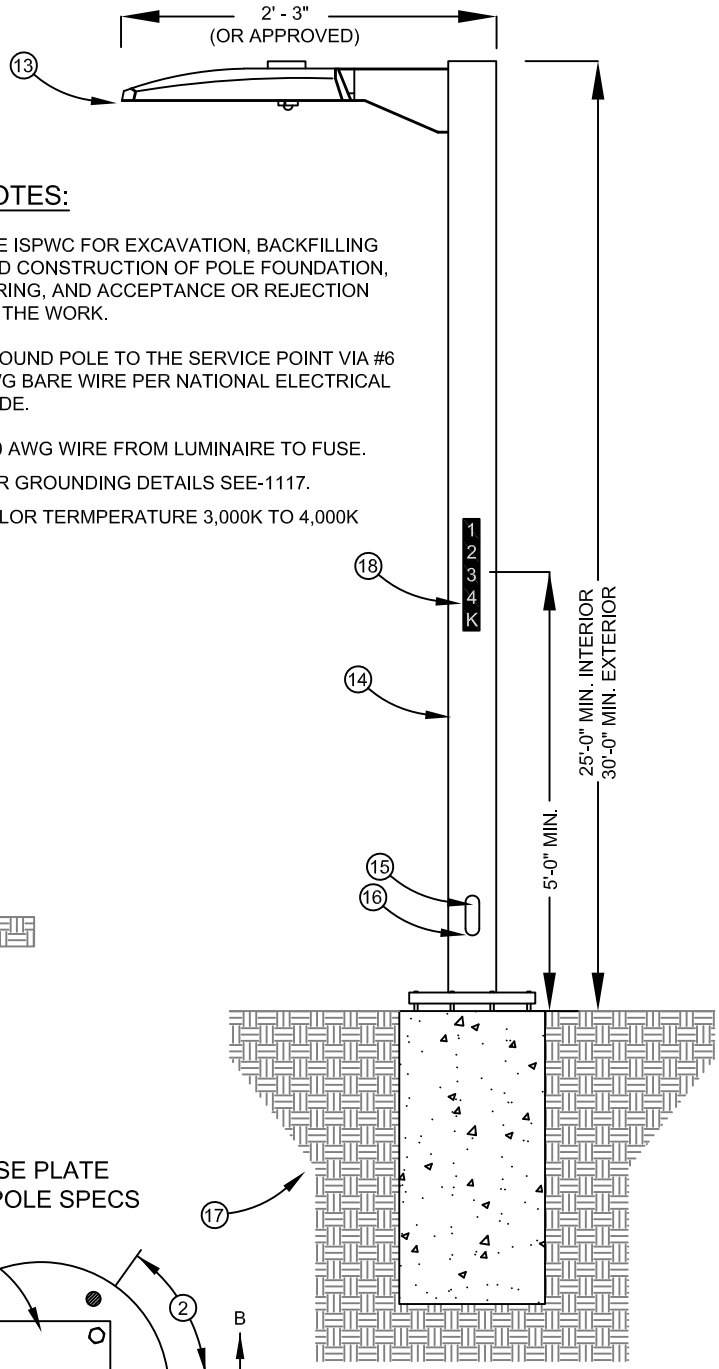

ALL PRODUCTS AS LISTED OR APPROVED SUBSTITUTIONS

v.8/10/2020

CITY OF KUNA
763 W AVALON AVE
KUNA, ID 83634
(208) 922-5546

STANDARD METAL STREET LIGHT DETAIL

KUNA STD DWG KSD-1116

NOTES:

(A) ALL PRODUCTS AS LISTED OR APPROVED SUBSTITUTIONS

(B) NO GALVANIZED TO BE USED IN THE POTABLE WATER PIPE OR FITTINGS - BRACES OK

(C) SADDLE COUPLINGS: USED FOR CONNECTION OF ALL SERVICE LINES TO PVC MAIN. SERVICE SADDLES: EPOXY COATED STEEL WITH STAINLESS STEEL BAND AND MUELLER THREADS (TYPE CC)

(D) NO SERVICE CONNECTIONS WITHIN ONE (1) FOOT OF THE PIPE ENDS. STAGGER MULTIPLE CONNECTIONS MADE ON THE SAME JOINT OF PIPE ALONG THE CIRCUMFERENCE AND SEPARATED BY A MINIMUM OF 18 INCHES.

(E) ALL LOCATOR WIRE SPLICES SHALL USE PRO-TRACE DB CONNECTORS

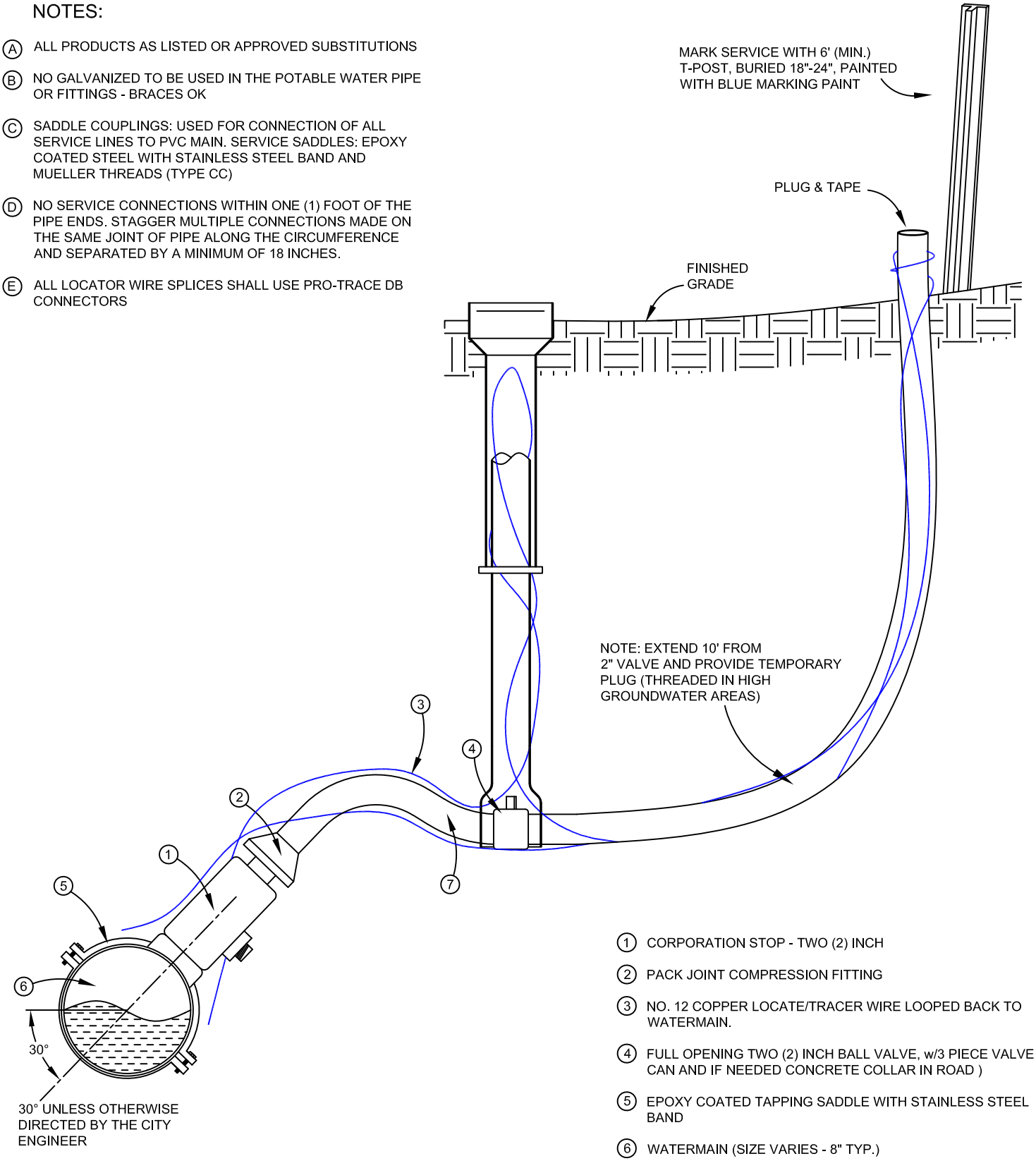

(1) CORPORATION STOP - TWO (2) INCH

(2) PACK JOINT COMPRESSION FITTING

(3) NO. 12 COPPER LOCATE/TRACER WIRE LOOPED BACK TO WATERMAIN.

(4) FULL OPENING TWO (2) INCH BALL VALVE, w/3 PIECE VALVE CAN AND IF NEEDED CONCRETE COLLAR IN ROAD)

(5) EPOXY COATED TAPPING SADDLE WITH STAINLESS STEEL BAND

(6) WATERMAIN (SIZE VARIES - 8" TYP.)

(7) 2" SERVICE LINE CLASS 250 POLYETHYLENE SIDR 7 PIPE (TYP.) NO SPLICING IS ALLOWED

v.8/10/2020

CITY OF KUNA
763 W AVALON AVE
KUNA, ID 83634
(208) 922-5546

WATER SERVICE CONNECTION

VACANT OR UNKNOWN COMMERCIAL
2" WATER SERVICE
KUNA STD DWG K401-2A

NOTES:

(A) **ALL PRODUCTS AS LISTED OR APPROVED SUBSTITUTIONS**

(B) NO GALVANIZED PIPE OR YELLOW BRASS FITTINGS TO BE USED

(C) SADDLE COUPLINGS: USED FOR CONNECTION OF ALL SERVICE LINES TO PVC MAIN. SERVICE SADDLES: EPOXY COATED STEEL WITH STAINLESS STEEL BAND AND MUELLER THREADS (TYPE CC)

(D) NO SERVICE CONNECTIONS WITHIN ONE (1) FOOT OF THE PIPE ENDS. STAGGER MULTIPLE CONNECTIONS MADE ON THE SAME JOINT OF PIPE ALONG THE CIRCUMFERENCE AND SEPARATED BY A MINIMUM OF 18 INCHES.

(E) CENTER METER BOXES LOCATED IN CONCRETE DRIVEWAYS IN A 4' X 4' SQUARE OF CONCRETE, SEPARATED FROM THE REST OF THE DRIVEWAY CONCRETE BY EXPANSION JOINT MATERIAL. USE A TRAFFIC RATED LID SET FLUSH WITH DRIVEWAY AND LID SHALL BE MARKED "WATER".

(F) SET OF METER LID TWO (2) INCHES ABOVE FINISHED GRADE EXCEPT AS NOTED IN NOTE "E"

(G) COPPERSETTERS MUST BE 7" (SHORT LAY) METER SETS

(H) INSTALL OR PROVIDE ONE (1) 20" X 1" D/C FOAM PAD 1.2# FOR EVERY METER PIT INSTALLED

(I) PROVIDE ONE (1) - FORD TEST PORT #RETRO-SS-2CHC FOR EACH PHASE OF A SUBDIVISION OR PROJECT FOR THE CITY TO INSTALL, PREFERRED IN A SINGLE METER PIT IF APPLICABLE.

(J) MARK SERVICE WITH 6' (MIN.) T-POST, BURIED 18"-24", PAINTED WITH BLUE MARKING PAINT

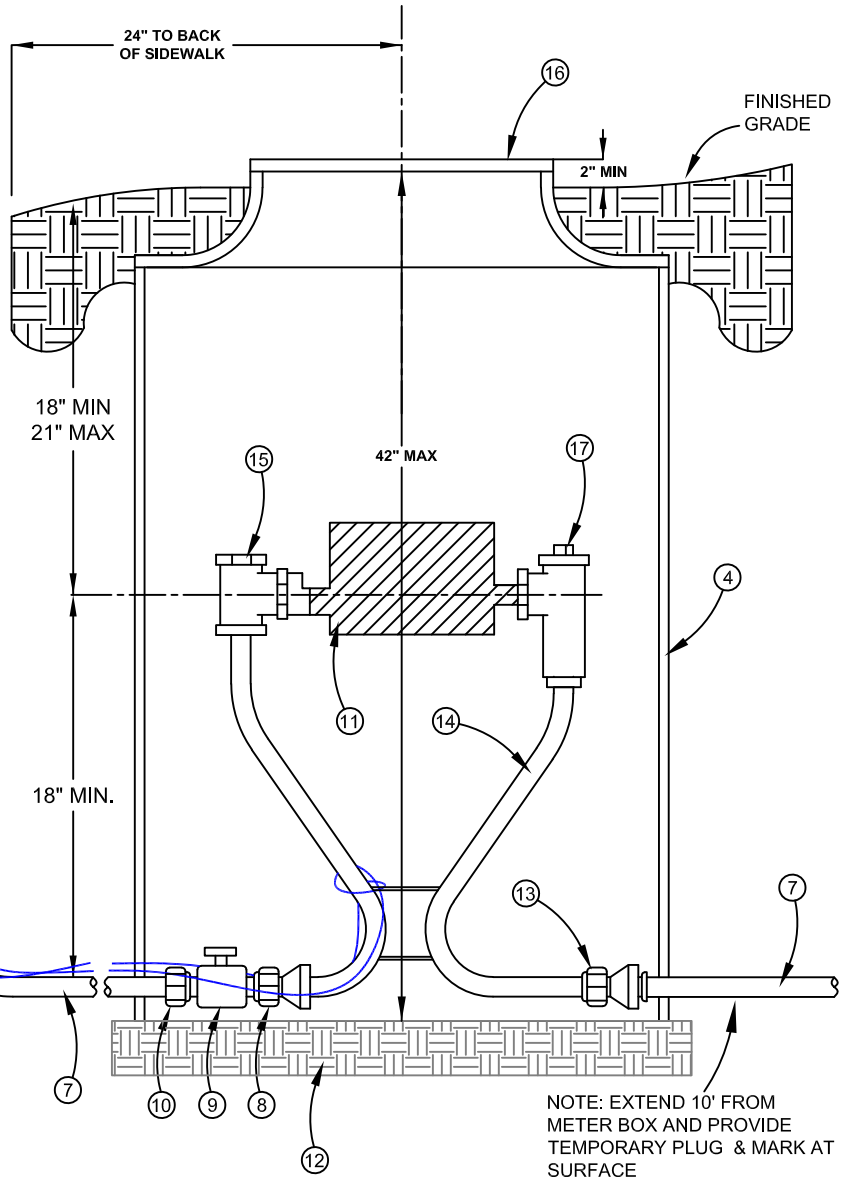

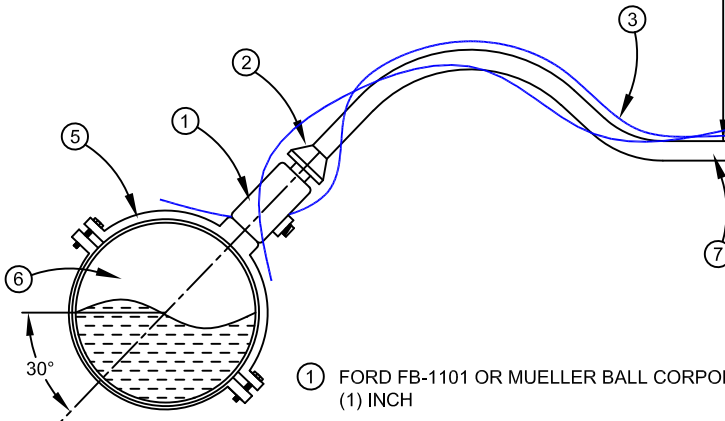

30° UNLESS OTHERWISE DIRECTED BY THE CITY ENGINEER

(1) FORD FB-1101 OR MUELLER BALL CORPORATION STOP - ONE (1) INCH

(2) PACK JOINT COMPRESSION FITTING

(3) NO. 12 COPPER LOCATE/TRACER WIRE LOOPED BACK TO WATERMAIN.

(4) 20" DIA X 36" DEEP METER BOX (NOTCH FOR SERVICE LINES)

(5) EPOXY COATED TAPPING SADDLE WITH STAINLESS STEEL BAND

(6) WATERMAIN (SIZE VARIES - 8" TYP.)

(7) **USE 1" DIA. CLASS 250 POLYETHYLENE SIDR 7 PIPE** (TYP.) NO SPLICING IS ALLOWED

(8) SWIVEL IRON PIPE THREAD CONNECTION

(9) FULL OPENING ONE (1) INCH MUELLER 300 BALL OR FORD B-11333 BALL VALVE

(10) PACK JOINT CURB STOP ADAPTER

(11) FUTURE 7" METER INSTALLED BY THE CITY OF KUNA

(12) FIRM UNDISTURBED EARTH OR COMPACTED SAND/GRAVEL

(13) DOUBLE PURPOSE COUPLING

(14) FORD **VBHC94-18W-81-44-NL** WITH MALE CONNECTION OR APPROVED EQUAL.

(15) VALVE PER ITEM #14

(16) D&L L2242 CAST IRON LID WITH TWO (2) RECESSED HOLES FOR DUAL SERVICE PITS AND ONE (1) RECESSED HOLE FOR SINGLE SERVICE METER PITS; 13 1/2" OPENING - 1 1/32" PENTAGONAL NUT

(17) CARTRIDGE CHECK VALVE FOR BACK-FLOW PREVENTION PER ITEM #14

v.8/10/2020

CITY OF KUNA
763 W AVALON AVE
KUNA, ID 83634
(208) 922-5546

WATER SERVICE CONNECTION

STANDARD 1" WATER SERVICE

KUNA STD DWG K401-1

NOTES:

- (A) ALL PRODUCTS AS LISTED OR APPROVED SUBSTITUTIONS
- (B) NO GALVANIZED TO BE USED IN THE POTABLE WATER PIPE OR FITTINGS - BRACES OK
- (C) SADDLE COUPLINGS: USED FOR CONNECTION OF ALL SERVICE LINES TO PVC MAIN. SERVICE SADDLES: EPOXY COATED STEEL WITH STAINLESS STEEL BAND AND MUELLER THREADS (TYPE CC)
- (D) NO SERVICE CONNECTIONS WITHIN ONE (1) FOOT OF THE PIPE ENDS. STAGGER MULTIPLE CONNECTIONS MADE ON THE SAME JOINT OF PIPE ALONG THE CIRCUMFERENCE AND SEPARATED BY A MINIMUM OF 18 INCHES.
- (E) CENTER METER BOXES LOCATED IN CONCRETE DRIVEWAYS IN A 4' X 4' SQUARE OF CONCRETE, SEPARATED FROM THE REST OF THE DRIVEWAY CONCRETE BY EXPANSION JOINT MATERIAL. USE A TRAFFIC RATED LID SET FLUSH WITH DRIVEWAY AND LID SHALL BE MARKED "WATER".
- (F) SET METER LID TWO (2) INCHES ABOVE FINISHED GRADE, EXCEPT IN DRIVEWAYS.
- (G) COPPERSETTERS MUST BE 17" METER SETS
- (H) PROVIDE TO CITY A 4' FLEX METER PIT INSULTATING BLANKET - (FIB STYLE)
- (I) MARK SERVICE WITH T-POST, BURIED 18"-24", PAINTED WITH BLUE MARKING PAINT

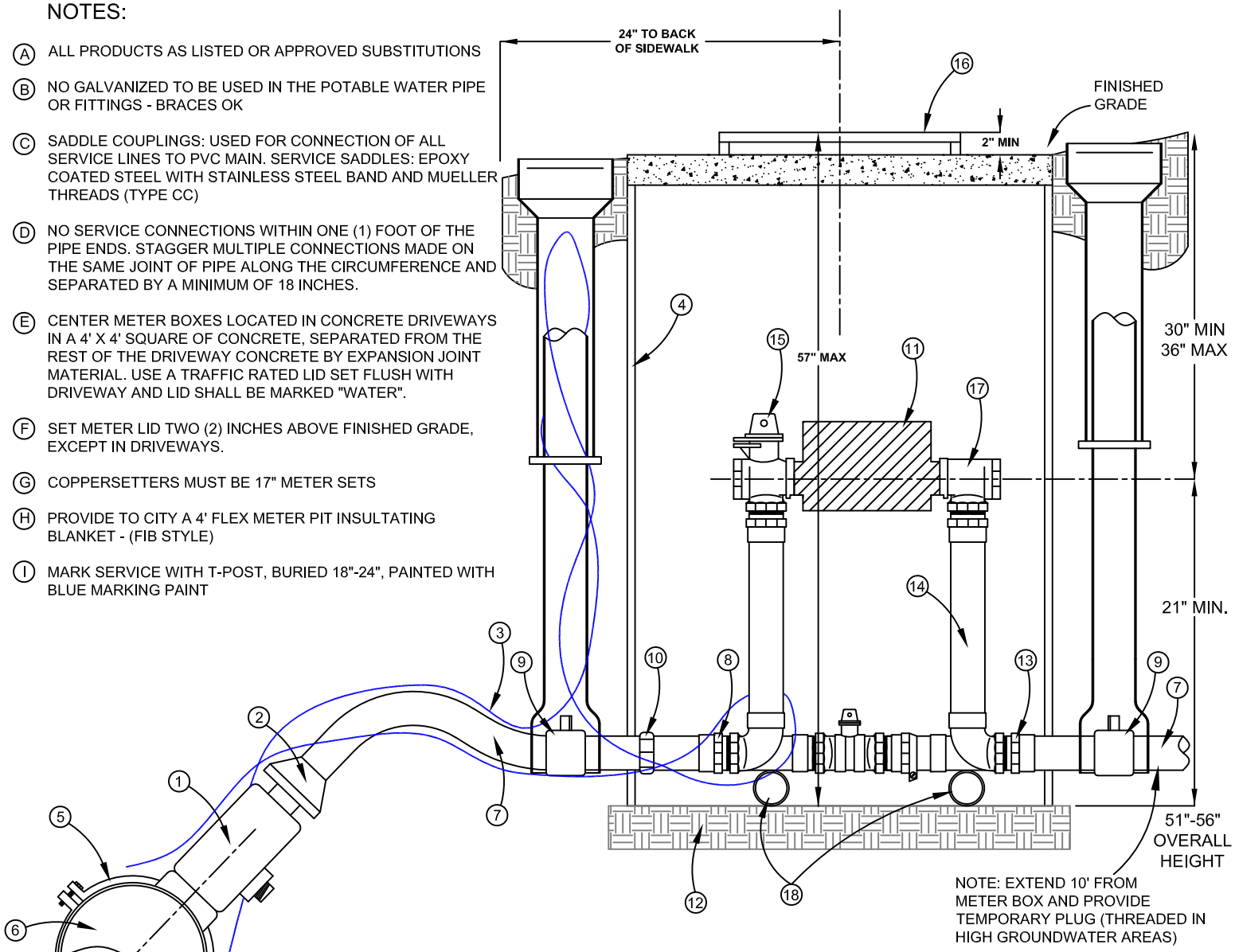

1. CORPORATION STOP - TWO (2) INCH
2. PACK JOINT COMPRESSION FITTING
3. NO. 12 COPPER LOCATE/TRACER WIRE LOOPED BACK TO WATERMAIN.
4. 30" DIA X 36" DEEP METER BOX (NOTCH FOR SERVICE LINES)
5. EPOXY COATED TAPPING SADDLE WITH STAINLESS STEEL BAND
6. WATERMAIN (SIZE VARIES - 8" TYP.)
7. 2" SERVICE LINE CLASS 250 POLYETHYLENE SIDR 7 PIPE (TYP.) NO SPLICING IS ALLOWED
8. SWIVEL IRON PIPE THREAD CONNECTION
9. FULL OPENING TWO (2) INCH BALL VALVE, w/3 PIECE VALVE CAN AND IF NEEDED CONCRETE COLLAR IN ROAD .
10. PACK JOINT CURB STOP FITTING
11. FUTURE 2" METER INSTALLED BY THE CITY OF KUNA
12. FIRM UNDISTURBED EARTH. (SET TILE ON 2" X 30" DIAMETER PRECAST CONCRETE BLOCK IF OVER EXCAVATION OCCURS)
13. DOUBLE PURPOSE COUPLING
14. FORD **VBHH77-21B-11-77-NL** WITH FEMALE CONNECTION
15. FORD BALL VALVE 18" - TWO (2) INCH COPPER SETTER WITH PADLOCK WINGS AND EXTENDED END ON EACH PER ITEM #14
16. D&L 5024 CAST IRON MANHOLE LID WITH RECESSED ANTENNAE HOLE; 24" OPENING
17. CARTRIDGE CHECK VALVE FOR BACK-FLOW PREVENTION PER ITEM #14
18. ONE (1) INCH GALVANIZED BRACE PIPE MIN. 18" - REQUIRED TWO (2)

v.8/10/2020

CITY OF KUNA
763 W AVALON AVE
KUNA, ID 83634
(208) 922-5546

WATER SERVICE CONNECTION

COMMERCIAL & 4-PLEX (TYPICAL)
STANDARD 2" WATER SERVICE
KUNA STD DWG COK-402

NOTES:

Ⓐ **ALL PRODUCTS AS LISTED OR APPROVED SUBSTITUTIONS**

Ⓑ NO GALVANIZED PIPE OR YELLOW BRASS FITTINGS TO BE USED

Ⓒ SADDLE COUPLINGS: USED FOR CONNECTION OF ALL SERVICE LINES TO PVC MAIN. SERVICE SADDLES: EPOXY COATED STEEL WITH STAINLESS STEEL BAND AND MUELLER THREADS (TYPE CC)

Ⓓ NO SERVICE CONNECTIONS WITHIN ONE (1) FOOT OF THE PIPE ENDS. STAGGER MULTIPLE CONNECTIONS MADE ON THE SAME JOINT OF PIPE ALONG THE CIRCUMFERENCE AND SEPARATED BY A MINIMUM OF 18 INCHES.

Ⓔ CENTER METER BOXES LOCATED IN CONCRETE DRIVEWAYS IN A 4' X 4' SQUARE OF CONCRETE, SEPARATED FROM THE REST OF THE DRIVEWAY CONCRETE BY EXPANSION JOINT MATERIAL. USE A TRAFFIC RATED LID SET FLUSH WITH DRIVEWAY AND LID SHALL BE MARKED "WATER".

Ⓕ SET OF METER LID TWO (2) INCHES ABOVE FINISHED GRADE EXCEPT AS NOTED IN NOTE "E"

Ⓖ COPPERSETTERS MUST BE 7" (SHORT LAY) METER SETS

Ⓗ INSTALL ONE (1) 20" X 1" D/C FOAM PAD 1.2# FOR EVERY METER PIT INSTALLED

Ⓘ PROVIDE ONE (1) - FORD TEST PORT #RETRO-SS-2CHC FOR EACH PHASE OF A SUBDIVISION OR PROJECT FOR THE CITY TO INSTALL, PREFERRED IN A SINGLE METER PIT IF APPLICABLE.

Ⓙ MARK SERVICE WITH T-POST, BURIED 18"-24", PAINTED WITH BLUE MARKING PAINT

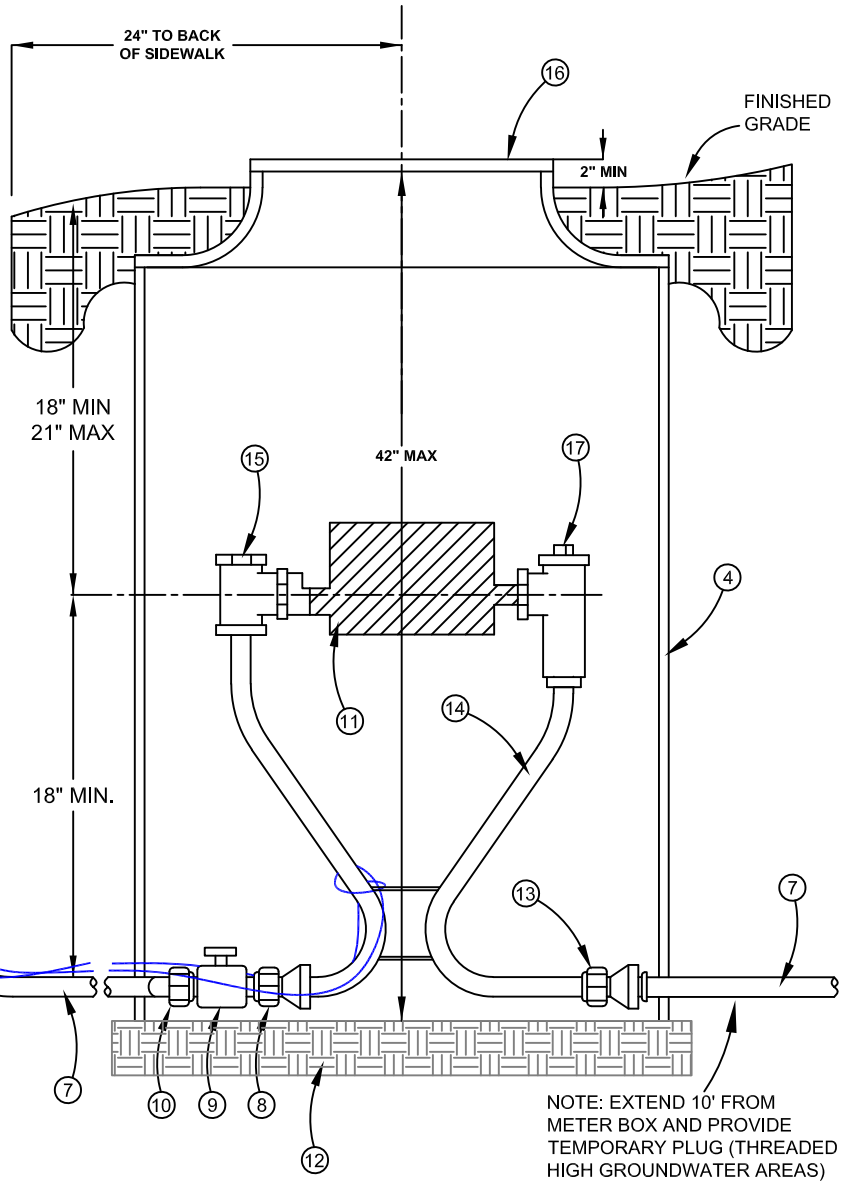

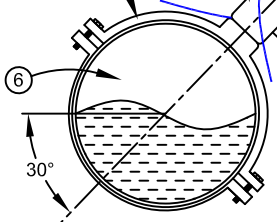

30° UNLESS OTHERWISE DIRECTED BY THE CITY ENGINEER

1. FORD FB-1101 OR MUELLER BALL CORPORATION STOP - ONE (1) INCH
2. PACK JOINT COMPRESSION FITTING
3. NO. 12 COPPER LOCATE/TRACER WIRE LOOPED BACK TO WATERMAIN.
4. 20" DIA X 36" DEEP METER BOX (NOTCH FOR SERVICE LINES)
5. EPOXY COATED TAPPING SADDLE WITH STAINLESS STEEL BAND
6. WATERMAIN (SIZE VARIES - 8" TYP.)
7. **USE 1" DIA. CLASS 250 POLYETHYLENE SIDR 7 PIPE**(TYP.) NO SPLICING IS ALLOWED
8. SWIVEL IRON PIPE THREAD CONNECTION
9. FULL OPENING 3/4" BALL VALVE
10. PACK JOINT CURB STOP ADAPTER
11. FUTURE **7" METER** INSTALLED BY THE CITY OF KUNA
12. FIRM UNDISTURBED EARTH OR COMPACTED SAND/GRAVEL
13. DOUBLE PURPOSE COUPLING
14. FORD **VBHC92-18W-11-33-NL** WITH MALE CONNECTION
15. VALVE PER ITEM #14
16. D&L L2242 CAST IRON LID WITH TWO (2) RECESSED HOLES FOR DUAL SERVICE PITS AND ONE (1) RECESSED HOLE FOR SINGLE SERVICE METER PITS; 13 1/2" OPENING - 1 1/32" PENTAGONAL NUT
17. CARTRIDGE CHECK VALVE FOR BACK-FLOW PREVENTION PER ITEM #14

v.8/10/2020

CITY OF KUNA
763 W AVALON AVE
KUNA, ID 83634
(208) 922-5546

WATER SERVICE CONNECTION

STANDARD ⅝" x ¾" WATER SERVICE
KUNA STD DWG K401-.75

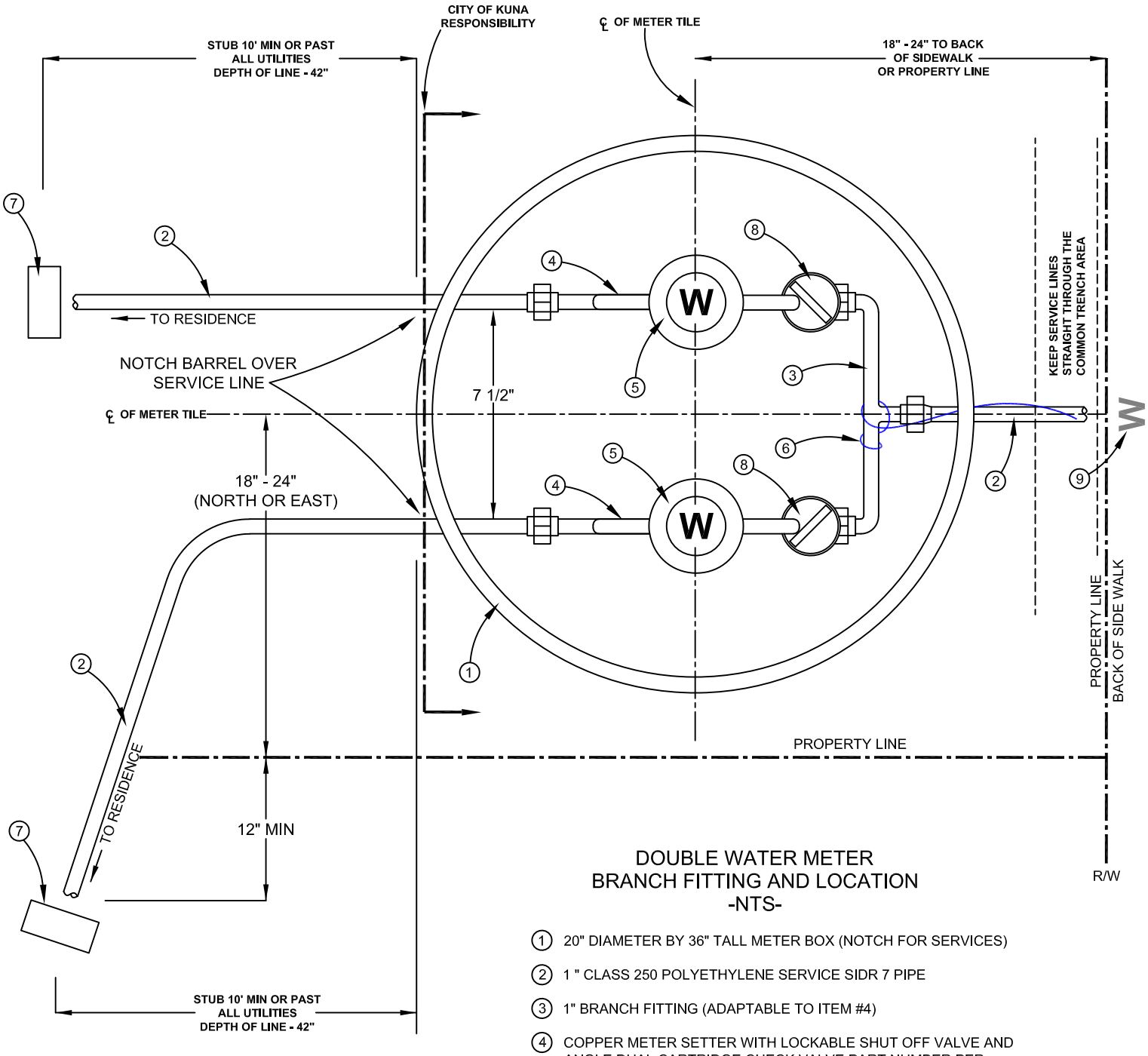

DOUBLE WATER METER BRANCH FITTING AND LOCATION
-NTS-

1. 20" DIAMETER BY 36" TALL METER BOX (NOTCH FOR SERVICES)
2. 1 " CLASS 250 POLYETHYLENE SERVICE SIDR 7 PIPE
3. 1" BRANCH FITTING (ADAPTABLE TO ITEM #4)
4. COPPER METER SETTER WITH LOCKABLE SHUT OFF VALVE AND ANGLE DUAL CARTRIDGE CHECK VALVE PART NUMBER PER APPROPRIATE SERVICE SIZE.
5. WATER METER **(7" METER TYP.)** FURNISHED BY CITY OF KUNA
6. No. 12 TRACER WIRE- LOOPED TO WATERMAIN
7. MARK SERVICE WITH 6' (MIN.) T-POST, BURIED 18"-24", PAINTED WITH BLUE MARKING PAINT
8. FULL OPENING BALL VALVE BASED ON SERVICE SIZE
9. STAMPED "W" IN FRONT OF WATER METER PIT

v.8/10/2020

CITY OF KUNA
763 W AVALON AVE
KUNA, ID 83634
(208) 922-5546

WATER SERVICE CONNECTION
WATER METER & PIT LAYOUT
KUNA WATER DETAIL K402

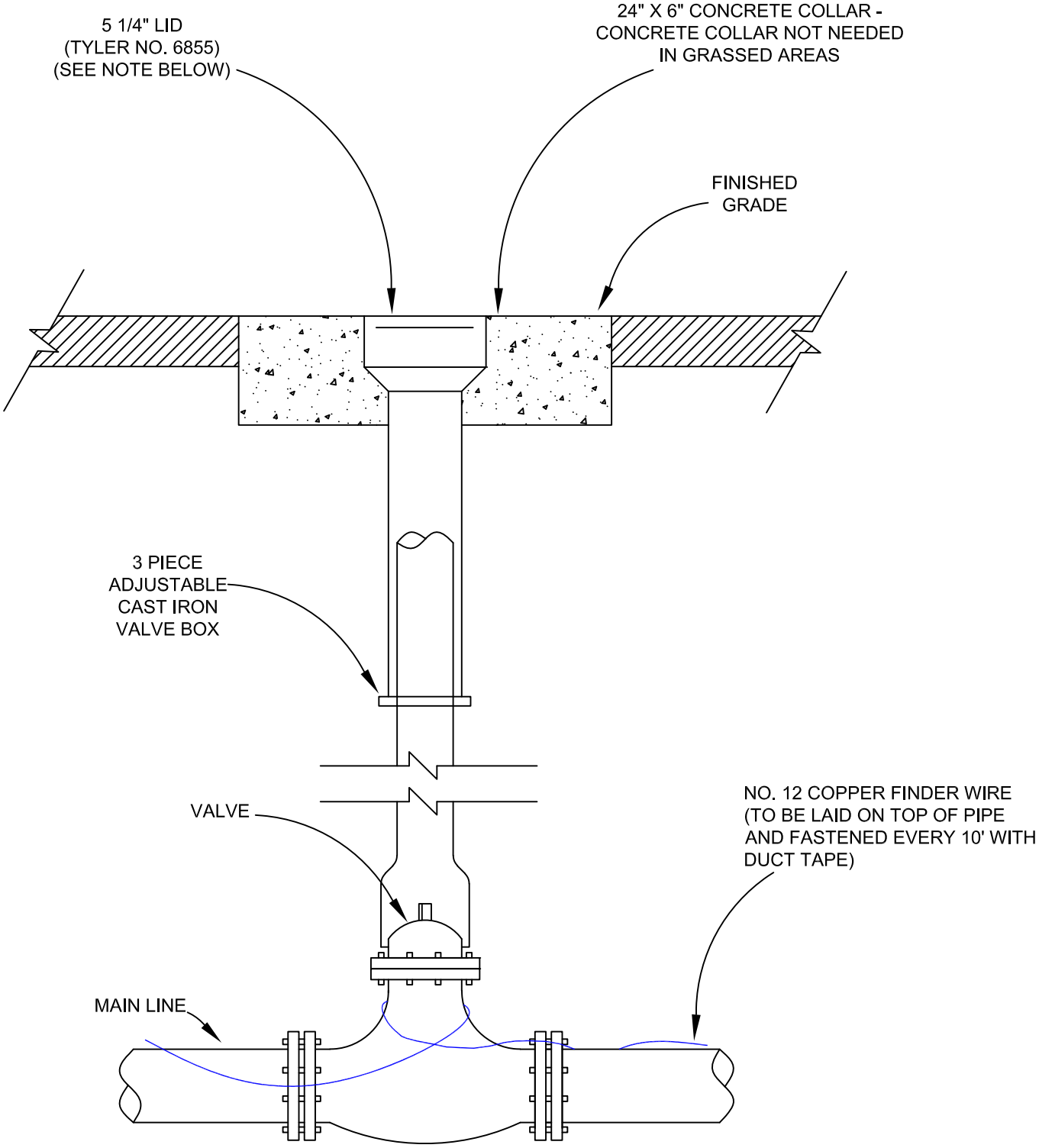

ALL PRODUCTS AS LISTED OR APPROVED SUBSTITUTIONS

v.8/10/2020

CITY OF KUNA
763 W AVALON AVE
KUNA, ID 83634
(208) 922-5546

WATER MAIN VALVE

MAIN LINE VALVE

KUNA STD DWG COK-400